International Journal of Advanced Smart Convergence Vol.9 No.2 123-128 (2020)
http://dx.doi.org/10.7236/IJASC.2020.9.2.123

IJASC 20-2-14

Design of Solar Cell Cooling System Using Convection Phenomena

Jae-hyuk Lee

Associate professor, Department of Deep Ocean Water, KyungDong University, Korea
E-mail jhlee@kduniv.ac.kr

Abstract

We constructed a cooling system for solar cells using convection phenomena and investigated its cooling performance. The cooling system didn't need any driving power or water resources.
The convection cooler manufactured with a right-triangle shape of an air duct was attached to the rear of the solar cell to confirm that cooling was performed using convection phenomena. When the ratio of duct width to attachment surface width was 3:7, and the ratio of entrance height and exit height of duct was 5:1, it showed the best cooling performance. Comparative experiments with solar cells without convection cooler showed that cooling effects from 16.5°C to 20.9°C occurred after 40 minutes exposed to the 1300W Xenon lamp condition.

Keywords: *Solar Cell Cooling, Convection Cooler, Air Duct, Free Cooling.*

1. Introduction

Silicon solar cells lose their power generation efficiency as the temperature rises, and their efficiency decreases by 5% for each 10˚C rise. For this reason, several cooling systems are being studied to address the disadvantage of reducing power generation in summer [1]. Lee developed the geothermal exchanging cooler system [2], and Lee and Cha developed the micro cooling system by the capillary force [3].

In addition, a water spray system has been developed that can have cooling effects as well as cleaning, but external power is required to operate the system, and water resources-related facilities are also required [4]. Recently, the research, when the temperature rises above the set level, the cold air is sprayed, cooled, and the amount of power generation is increased, is being progressed [5].

In this paper, a cooling system using convection phenomena was designed and evaluated. This cooling system does not require water resources, and the goal is not to use external power by utilizing convection phenomena.

2. Principle of Cooling System Using Convection Phenomena

The convection cooler is designed as shown in Figure 1. The convection cooler is made by folding a thin

Manuscript Received: April. 18, 2020 / Revised: April. 22, 2020 / Accepted: April. 28, 2020
Corresponding Author: jhlee@kduniv.ac.kr
Tel: +82-33-639-0263, Fax: +82-33-639-0339
Associate Professor, Department of Deep Ocean Water, Kyung Dong University, Korea

aluminum sheet of 0.4mm thick, and the attached surface of the lower part is flat to attach to the rear of the solar cell, and the upper part has the form of an air duct through which air can pass. The air duct has a right-triangle shape with different heights of the entrance and exit.

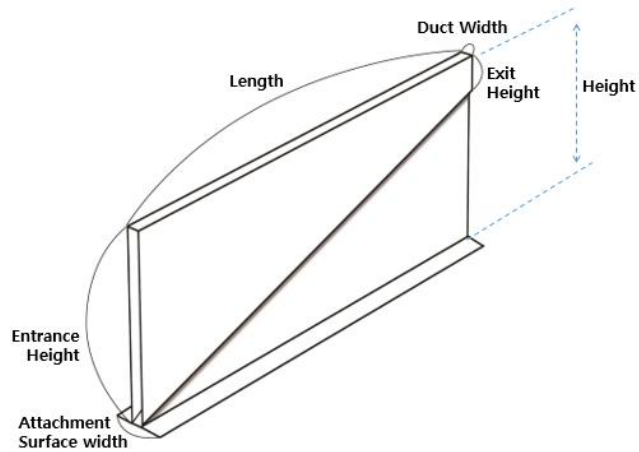

Figure 1. Shape of convection cooler

Figure 2 shows the air duct entrance facing the ground when the convection cooler is attached to the rear of the fixed solar cell.

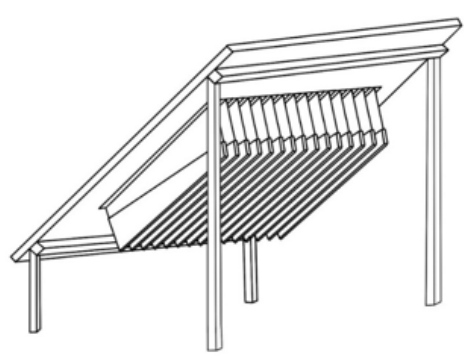

Figure 2. Convection cooler attached to the rear of the solar cell

Figure 3 shows the process by which heat from the rear of the solar cell is discharged through the convection cooler.

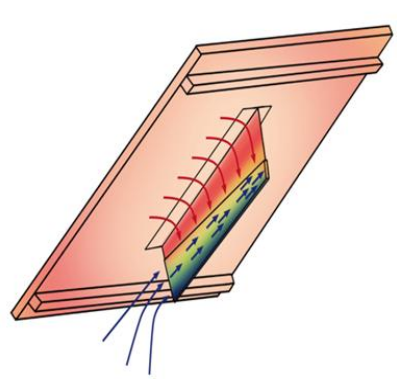

Figure 3. Heat transfer flow of convection cooler

1) When the temperature of the solar cell rises, the heat is transferred to the lower part of the convection cooler attached to the rear of the solar cell with a thermoelectric tape.
2) Heat transferred to the lower part of the convection cooler is transferred to the air duct at the top.

3) The air inside the air duct heats up and rises.
4) Since the air duct has a wide entrance and narrow exit, the rising air gradually speeds up as the area of passage becomes narrower.
5) When the fast-paced air is discharged to the exit quickly, low-temperature outside air is inhaled into the entrance.
6) As a result, convection is accelerated and the temperature at the back of the solar cell decreases.

3. Experiment for determination of the specification of convection coolers

The experiment was conducted to find the optimal figure by changing the length, height, width of the convection cooler, width of the attachment surface, width of the duct, height of the duct entrance and exit.

The experiment was conducted by placing the module with the convection cooler (device module) and the module with no cooling system (general module) attached to the back of the 20W solar cell at an angle of 30° facing each other, and then installing the xenon lamp solar cell simulator in the middle of the two modules, operating it for 1300 W - 40 minutes at intervals of 10 minutes recording (Figure 4 and 5).

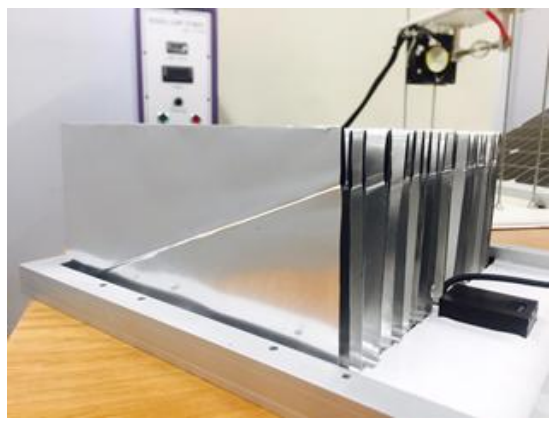

Figure 4. Convection cooler attached to solar cell

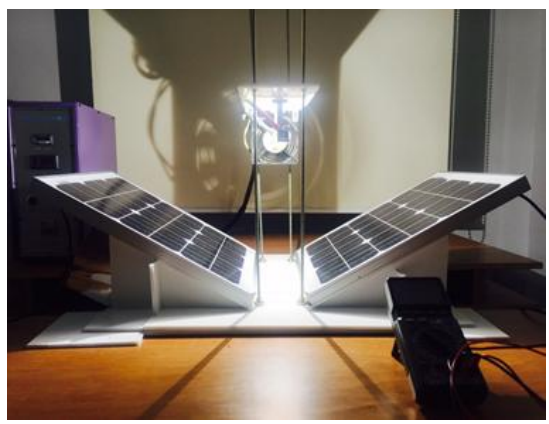

Figure 5. Experiment of using solar cell simulator

Table 1 shows the temperature measurements at the various size of the length, height, width of the convection cooler, width of the attachment surface, width of the duct, height of the duct entrance and exit.

Table 1. Temperature measurement results of general solar module and convection cooler-attached module

Exp. No.	Height (mm)	Length (mm)	Duct Width (mm)	Attachment Surface Width (mm)	Entrance Height (mm)	Exit Height (mm)	10 minute temperature(˚C)		20 minute temperature(°C)		30 minute temperature(˚C)		40 minute temperature(˚C)	
							General	Device	General	Device	General	Device	General	Device
A-1	80	150	5	5	60	20	66.8	61.9	72.6	61.1	74.9	70.7	75.2	64.7
A-2	80	150	5	5	60	20	67.4	60.6	75.3	65.1	75.6	67.6	76.7	67.1
A-3	80	150	5	5	60	20	69.1	63.4	78.1	67.6	76.1	66.6	78.9	68.8
A-4	80	150	5	5	60	20	67.6	63	77	69.2	75.8	69.8	76.8	70.8
A-5	100	150	3	14	70	30	69.7	60.6	80.5	66.2	80.9	67.8	81.5	69.2
A-6	100	150	3	7	80	40	69.3	60.1	74.4	63	76	64	76.5	63.8
A-7	100	150	3	7	100	30	70	58.7	78.9	62.9	80.7	65.4	81.1	65.3
A-8	100	100	3	7	100	30	70.3	57.7	79.1	64.2	80.3	64.7	80.9	64.8
A-9	100	200	3	7	80	40	70.3	59.2	75.9	62.7	77.4	64.2	78.1	64.1
A-10	100	200	3	7	70	30	67.3	57.9	76.4	63.2	78.3	64.7	78.3	64.6
A-11	100	200	3	7	50	50	67.4	58.9	77.4	64.9	79.2	67.3	79.4	67
A-12	100	200	3	7	70	30	65.9	58.2	74.9	62.6	77.7	64.3	78.1	63.9
A-13	100	300	3	7	70	30	68.9	57.5	77	62.7	78.8	64.2	79.9	64.7
A-14	150	300	3	5	150	30	76.9	62.9	81.7	66.4	83.2	68.0	83.4	67.3
A-15	150	300	3	7	150	30	69.5	53	77.4	58.6	78.7	58.4	79.9	59
A-16	150	300	3	14	150	30	72.2	63.8	77	67.5	81	68.6	81.5	68.8

The cooling effect was the best when the ratio of the entrance and exit heights of the air duct was 3:1 and when the width of the air duct and the attachment surface was 3mm and 7mm. (Figure 6 and 7)

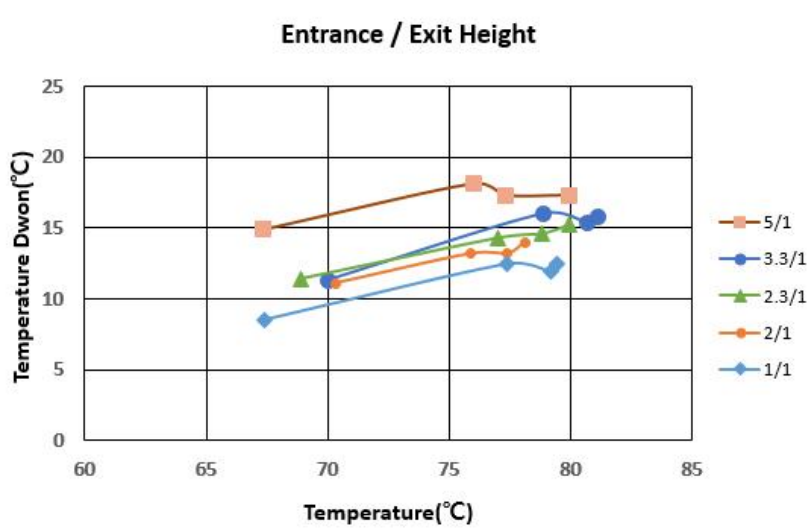

Figure 6. Cooling effect (Entrance height / Exit height)

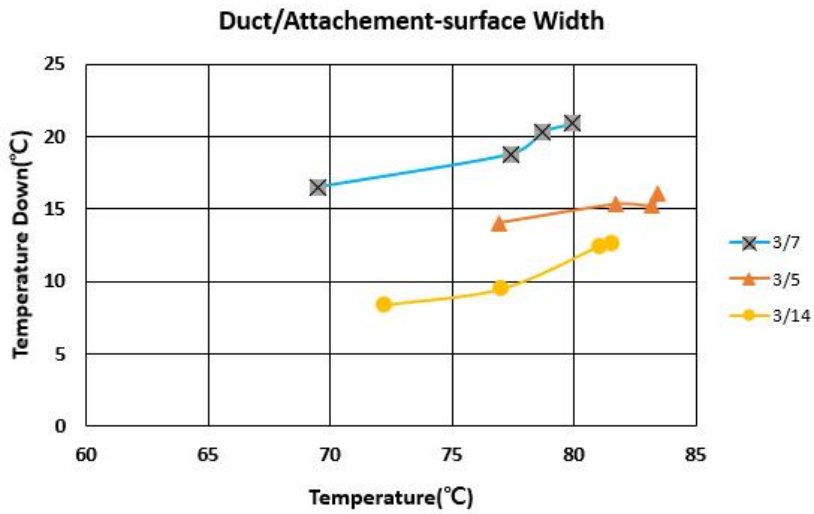

Figure 7. Cooling effect (Duct width / Attachment surface width)

Figure 8 and 9 showed that solar cells with the convection cooler has the best cooling effect of minimum of 16.5°C and maximum of 20.9°C when it is 150mm high, 300mm long, 3mm duct width, 7mm attachment surface width, 150mm entrance height and 30mm exit height.

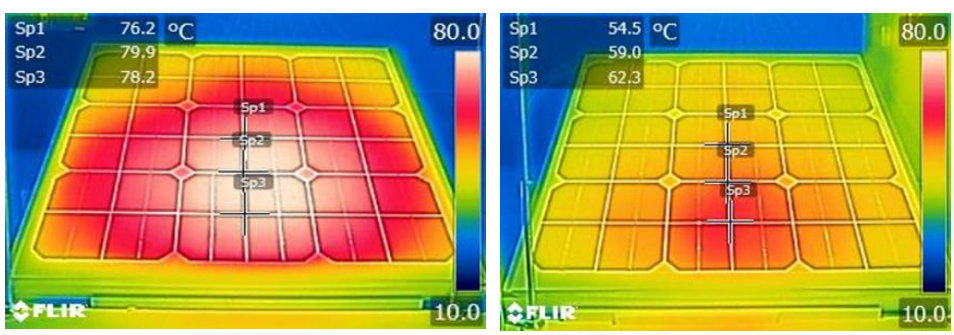

(a) General module after 40 minutes (b) Device module after 40 minutes

Figure 8. Cooling experiment thermal infrared images

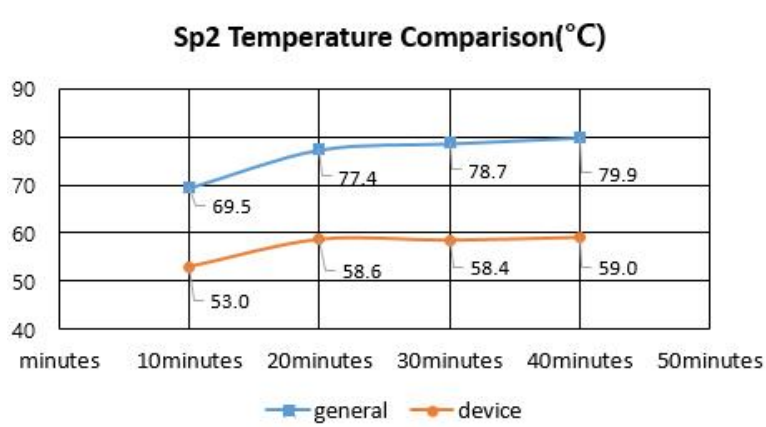

Figure 9. Temperature comparison of thermal infrared image (Sp2)

4. Conclusion

We constructed a cooling system for solar cells using convection phenomena and investigated its cooling performance. The cooling system didn't need any driving power or water resources.

1) The convection cooler manufactured with a right-triangle shape of a duct was attached to the rear of the solar cell to verify that cooling was performed using convection phenomenon.

2) When the ratio of duct width to attachment surface width was 3:7, and the ratio of entrance height and exit height of duct was 5:1, it showed the best cooling performance.

3) Comparative experiments with solar cells without convection coolers showed that cooling effects of minimum of 16.5°C and maximum of 20.9°C were generated after 40 minutes exposed to the 1300W Xenon lamp condition.

References

[1] Chan-hee Park, "A cooling device of Solar-Cell using earth heat conduction by aluminum or iron pipe", *Korea Patent* 10-329909,2013.

[2] Jei-Hoon Lee *et al*., "Development of geothermal exchanger for efficiency improvement of solar cell module", *Journal of the Korea Academia-Industrial Cooperation Society*, Vol. 16, No. 4 pp. 2966-2970, 2015.
DOI: http://dx.doi.org/10.5762/KAIS.2015.16.4.2966 ISSN 1975-4701 / eISSN 2288-4688

[3] Hee-Joon Lee and Gueesoo Cha, "Development of Solar Concentrator Cooling System", *Journal of the Korea Academia-Industrial Cooperation Society,* Vol. 15, No. 7 pp. 4463-4468, 2014.
DOI: http://dx.doi.org/10.5762/KAIS.2014.15.7.4463 ISSN 1975-4701 / eISSN 2288-4688

[4] Jooseok Jin *et al*., "Improving the effectiveness of a photovoltaic system by cooling on the surface of photovoltaic cells", *Proc. Spring Workshop on New & Renewable Energy*, pp.183-186, 2009

[5] Yongho Yoon, "Research Plan to improve Power Generation Efficiency of Photovoltaic Units using Photovoltaic Module Cooling System" *The Journal of The Institute of Internet, Broadcasting and Communication,* Vol. 20, No. 1, pp.199-204, Feb. 29, 2020
DOI: https://doi.org/10.7236/JIIBC.2020.20.1.199