J Electr Eng Technol.2018; 13(6): 2268-2275
http://doi.org/10.5370/JEET.2018.13.6.2268

ISSN(Print) 1975-0102
ISSN(Online) 2093-7423

Self-Starting Excitation System with Low-Power Permanent Magnet Generator

Chong Hyun Cho* and Dong-Hee Lee†

Abstract – This paper presents a high-efficiency low-power permanent magnet (PM) generator for the power supply of the generator exciter. In the conventional generator system, the power for the exciter is fed by the generator output power or an emergency battery for the starting. The proposed low-power PM generator can generate the proper power and voltage to excite the exciter field winding. According to the starting of the generator, the designed PM generator can supply the constant voltage to the Automatic Voltage Regulator (AVR), then it can be used to control of exciter field current for the generator. Because of the designed PM generator which is placed inside the conventional generator system, the emergency battery and Potential Transducer(PT) for AVR can be removed. Thus, the total efficiency can be improved. The proposed generator system is tested in the practical system. And the efficiency characteristic is analyzed.

Keywords: Embedded PM generator, Exciter power supply, Fast self-starting.

1. Introduction

The generator system is the most important in the modern electric power system. Recently, various generation systems such as renewable power generation have gained a lot of attention [1-3]. Among various renewable power generations, the main part is electric generator except for the solar photovoltaic power system. Although various generator types can be adopted for the power system, the conventional winding field type generator with AVR is most widely used due to the easy control and free from the high power converter.

The conventional winding type generator system consists of the main generator, exciter, and AVR with the emergency battery. The main generator produces an output voltage and power to supply the electric power to the load. In order to control the output voltage of the main generator, the exciter has to supply the proper voltage to produce the main flux from the field winding of the main generator. The exciter is another generator to supply the field flux of the main generator, and the output voltage of the exciter is controlled by the field winding current of the exciter which is fed by AVR. The power for AVR is fed by the output of the main generator and PT. When the residual flux is enough in the field of the main generator, the generator can start and produce the output voltage at the starting. Otherwise, the exciter cannot excite the field flux of the main generator due to the insufficient output. For the starting of the generator, the staring power may be supplied by the emergency battery which causes the discharge problem and maintenance problem[4].

† Corresponding Author: Dept. of Mechatronics Engineering, Kyungsung University, Busan, Korea. (leedh@ks.ac.kr)
* SunTech. CO. LTD, SunCheon, Korea. (air0427@empal.com)
Received: March 25, 2018; Accepted: May 26, 2017

Furthermore, the power for the AVR is fed by the generator with voltage transformer to adjust the input voltage of the AVR. The power losses of the transformer and the main generator for the excitation of the exciter is increased.

The brushless outer pole PM exciter with rotating rectifier circuit is proposed to improve the dynamic response and self-excitation [5-8]. In the proposed method, a 3-phase / 6-phase SCR circuit is designed in the rotating part with a complex wireless communication. In order to increase the total efficiency, the hybrid excitation structures have been researched [9-11].

The hybrid excitation uses the PM excitation and field winding excitation together to regulate the output voltage. The PM is designed to supply sufficient flux to produce the output voltage in the no-load condition. And the field winding current is controlled to stabilize the constant output voltage in accordance with the load variation. Although the hybrid generator can increase the efficiency, the optimal design is very difficult. In order to adopt the hybrid generator, the total system is fully changed compared with a conventional generator. Furthermore, the flux variation due to the magnetization and demagnetization of the PM can make output voltage variation.

The PM exciter is used as pre-exciter for the huge generator system [12-16]. For the control of PM exciter, the two-phase inverter and SVM(Space Vector Modulation) are adopted using speed sensor.

In this paper, the embedded high-efficiency low-power PM generator is proposed in order to provide the AVR and exciter power. The proposed embedded generator is installed on the generator shaft. So that it can generate the optimized voltage to operate the AVR and exciter of the generator. Because the output voltage of the low-power PM

Copyright ⓒ The Korean Institute of Electrical Engineers
This is an Open-Access article distributed under the terms of the Creative Commons Attribution Non-Commercial License (http://creativecommons.org/licenses/by-nc/3.0/) which permits unrestricted non-commercial use, distribution, and reproduction in any medium, provided the original work is properly cited.

generator is proportional to the generator speed, it can supply the constant voltage for the AVR at the constant speed of the generator. Therefore, the main generator can start with low residual flux and without an emergency battery. Furthermore, the usage of the high-efficiency PM generator can increase the total efficiency of the generator system due to the expurgation of power transformer and the reduction of the power losses of the main generator for the exciter.

In order to verify the proposed system, the low-power PM generator is designed for the conventional 330 kW generator system and it is installed inside the generator. The efficiency and the voltage control performance are tested in this paper.

2. The Proposed Generator System

Fig. 1 shows the conventional generator with a winding exciter and external AVR which is fed by the output of the generator. In this figure, the generator is operated by the diesel engine. The main field current of the generator to generate the output voltage is supplied by the rectified generating voltage of the exciter. And the voltage of the exciter is controlled by the field current of the exciter which is fed by AVR and the output voltage of the generator.

In this figure, the output voltage of the generator can be expressed as follow:

$$V_{gen} = \left(\frac{sK_A}{1+sT_A}\right)\left(\frac{sK_E}{1+sT_E}\right)\left(\frac{sK_G}{1+sT_G}\right)\cdot \Delta V_{gen} \quad (1)$$

$$\Delta V_{gen} = V_{gen}^{*} - V_{gen} \quad (2)$$

where V_{gen}^{*} and V_{gen} are the reference and actual output voltage of the generator, respectively. And $\frac{sK_A}{1+sT_A}$, $\frac{sK_E}{1+sT_E}$ and $\frac{sK_G}{1+sT_G}$ denote the transfer functions of the AVR, exciter and generator from the voltage error.

In order to produce the starting voltage in the generator, the sufficient residual flux is essential in the field of the generator. However, the magnetized winding and core of the field are slowly demagnetized. Because of the insufficient residual flux, the output voltage cannot be generated at the starting. In order to solve this problem, the emergency battery is connected to the AVR power. The usage of the emergency battery occurs another maintenance problem in the generator system. Since the AVR power is fed by the voltage transformer and generator output voltage, the additional losses of the voltage transformer and the generator is decreased by total efficiency of the generator system.

Fig. 2 shows the block diagram of the proposed generator system which has a high-efficiency low-power PM generator for the exciter field part. In this figure, the power of AVR is fed by the proposed low-power PM generator to excite the exciter field winding. Since the output voltage of the proposed PM generator can be produced by the engine operation, the emergency battery is not required for starting the generator. Furthermore, the voltage transformer to adjust from the output voltage to input voltage of the AVR, is not used in the proposed generator system due to the direct connection of the designed PM generator. The proposed low-power PM generator has high efficiency compare with the main generator. Moreover, it can reduce the power losses of the

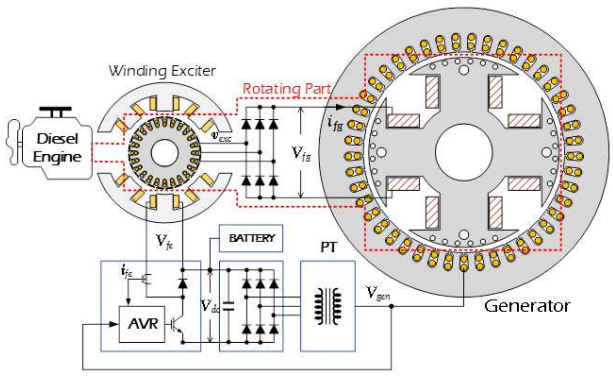

Fig. 1. Conventional generator system with winding exciter

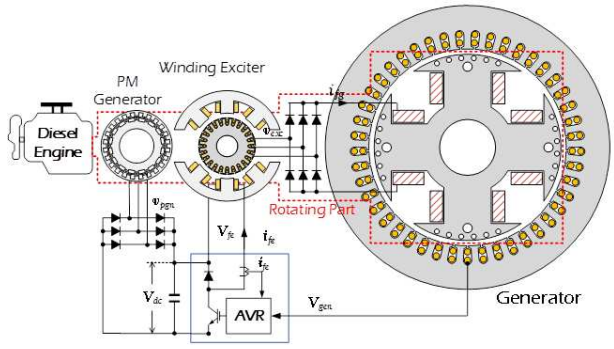

Fig. 2. The proposed generator with low-power PM generator

Table 1. Specifications of the main generator

Rated power	330[kW]	Rated Voltage	380[V]
Rated speed	1,800[rpm]	Structure	3 Φ - 4poles
Stator outer dia.	520 [mm]	Rotor outer dia.	365 [mm]
Stator inner dia.	370 [mm]	Rotor inner dia.	180 [mm]
Slot numbers	S48/4poles	Stack length	510 [mm]
Stator winding	7p - 2 turns	Rotor winding	200 turns

Table 2. Specifications of the exciter

Rated power	1.5 [kW]	Rated voltage	100[V]
Rated speed	1,800[rpm]	Structure	3 Φ - 8poles
Stator outer dia.	340 [mm]	Rotor outer dia.	200 [mm]
Stator inner dia.	202 [mm]	Rotor inner dia.	75 [mm]
Slot numbers	S8 / R24	Stack length	50[mm]
Stator winding	350 turns	Rotor winding	4p-7turns

voltage transformer. Therefore, the efficiency of the exciter can be increased by using the proposed generator system.

In this paper, low-power PM generator is designed for the 330 kW - 380 V three-phase generator. Table 1 and Table 2 show the detailed specifications of the designed system.

The power of the designed PM generator is 300[W] less than the exciter due to the power amplification at the exciter. The output voltage of the PM generator is designed for the digital AVR controller. In order to reduce the voltage ripple in the DC-link of the digital AVR, the pole numbers of the designed PM generator is 16 poles. The output frequency is 240[Hz] at the rated speed. Table 3 shows the detailed specifications of the designed PM generator for the AVR and exciter field winding excitation.

The rated output current of the AVR is 2 A in case of the rated load condition of the generator. However, the maximum current at the sudden short condition is 8 A for the parallel control mode. The designed AVR for the generator can be started at 110 Vdc due to the Switched Mode Power Supply of the controller. For the stable operating of the generator, the designed PM generator has to generate 80 Vac at 45 Hz frequency that is 1,350[rpm] of the engine speed. In this paper, the rated output voltage is defined as 120 Vac considering the design margin and speed ripple of the engine.

Fig. 3 shows the mechanical structures of the proposed generator system. As shown in Fig. 3, the proposed low-power PM generator is additionally installed at the end of generator. The stator winding of the proposed PM generator is connected to the digital AVR. The output of the digital AVR is connected to the exciter stator winding. Then, the output voltage of the exciter is rectified by the diode rectifier and connected to the rotor winding of the main generator.

Table 3. Specifications of the PMG

Rated Power	300[W]	Rated Voltage	135[V]
Rated Speed	1,800[rpm]	Structure	3 Φ –8poles
Stator Outer Dia.	250 [mm]	Rotor Outer Dia.	185.9 [mm]
Stator Inner Dia.	189.8 [mm]	Rotor Inner Dia.	124 [mm]
Slot numbers	S24/16 poles	Stack Length	20[mm]
Stator Windings	50 turns	PM number	16

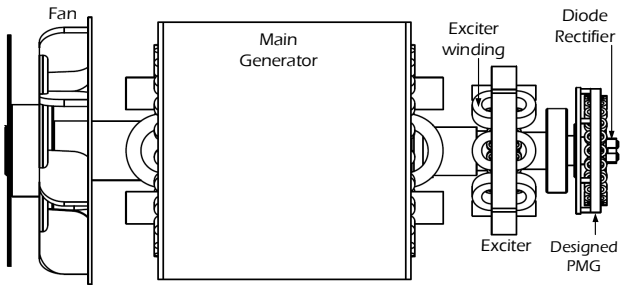

Fig. 3. Structures of the proposed generator system

3. Analysis of the Designed System

In order to verify the proposed generator system, the designed main generator, winding exciter and the power PM generator are analyzed by Finite Element Method (FEM). Fig. 4 shows the flux density and output voltages of the designed main generator, respectively. In this figure, the main generator has rotating field winding and stationary armature winding. The main generator is DC/AC electric machinery which the DC field current generates the AC output voltage. The maximum flux density is 1.8 T at the end of slot teeth. The average flux density is 1.6 T. The output phase voltage is 220 Vrms at no-load and full-load conditions in the FEM analysis. The Total Harmonic Distortion(THD) is 0.32% which is excellent quality of the AC power.

Fig. 5 shows the analyzed results of the designed exciter for the generator. As stated, the exciter generates an AC output voltage from the DC input current of the stator winding. And the output voltage of the rotating armature winding is rectified by the diode rectifier, then the rectified voltage is connected to the rotating field winding of the generator shown in Fig. 4(a). The stator winding (field winding) is connected to the output of the designed digital AVR (DAVR) to control the output voltage of the exciter

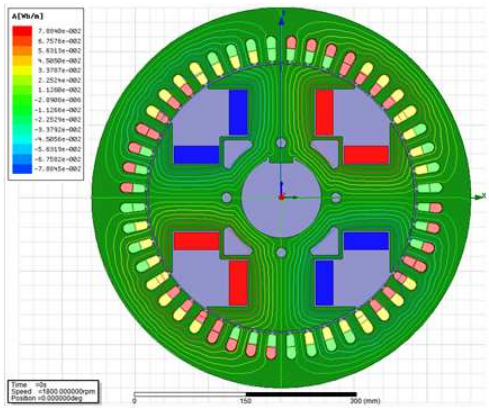

(a) Flux density of the designed main generator

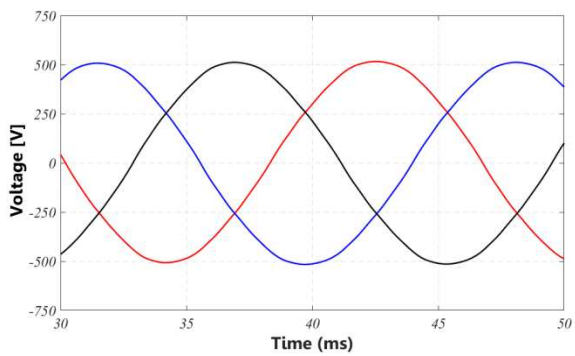

(b) Phase output voltage of the designed generator(rated load)

Fig. 4. Analyzed results of the main generator

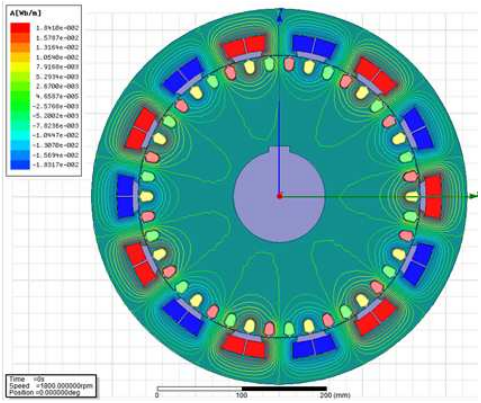

(a) Flux density of the designed exciter

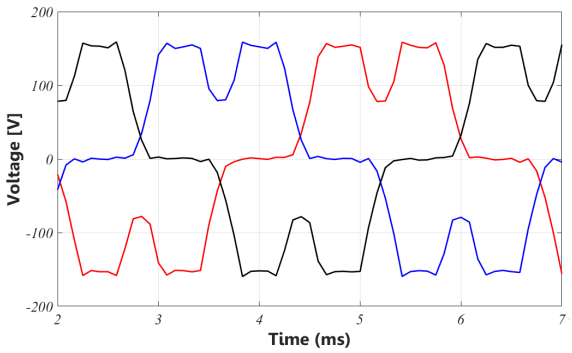

(b) Flux density of the designed exciter

Fig. 5. Analyzed results of the designed exciter

and field current of the main generator.

Fig. 6 shows the FEM analysis results of the designed PM generator for the exciter field winding and DAVR. In this figure, the rotor is designed as 16 poles permanent magnet. The stator has 24 slots. The armature winding in the stator is connected to the input of the designed DAVR. The output voltage is rectified by the diode rectifier, after that, changed DC link voltage of the PWM controller.

4. The Designed Voltage Controller

For the control of the proposed generator system, a simple DAVR is designed in this paper.

The voltage detection of the voltage controller uses two line voltages sensing method with the angle of the output voltage. The voltage angle is estimated by the frequency of the output voltage. Then, the RMS(Route Mean Square) voltage of the generator is derived by the 2-axis voltage transform as follows.

$$v_{wu} = -\left(v_{uv} + v_{vw}\right) \tag{3}$$

$$v_{\alpha s} = v_{uv} \tag{4}$$

$$v_{\beta s} = \left(v_{vw} + v_{wu}\right) \cdot \left(1 / \sqrt{3} \right) \tag{5}$$

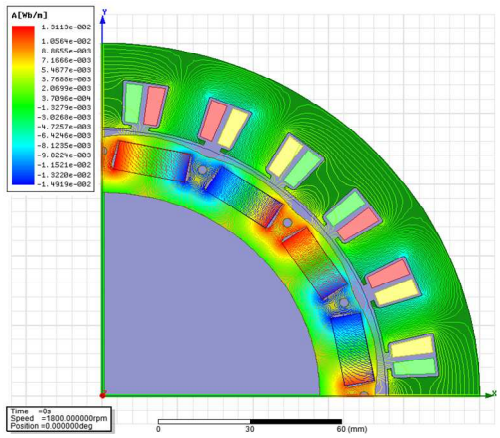

(a) Flux density of the designed PM generator

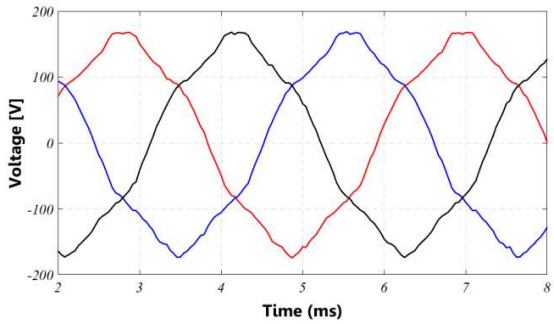

(b) Output voltage of the designed low power PM generator

Fig. 6. FEM analysis of the proposed low power PMG

$$V_{gen} = \sqrt{\left(v_{\alpha s}^2 + v_{\beta s}^2\right)} \tag{6}$$

Where v_{uv} and v_{vw} are the measured voltage from the PT. $v_{\alpha s}$ and $v_{\beta s}$ are the transformed 2-axis voltage from the generator. The generator voltage can be derived by the magnitude of the $v_{\alpha s}$ and $v_{\beta s}$.

The designed voltage controller of the generator uses Proportional-Integral-Differential (PID) controller with an anti-windup controller. Fig. 7 shows the designed voltage controller of the generator and the current controller of the exciter. As stated, the output voltage of the generator is indirectly controlled by the exciter field current as follows.

$$I_{fe}^{*} = K_{pvs} \Delta v_g + K_{dvs} \left(\frac{\Delta v_g}{dt} \right) + K_{ivs} \int \left(\Delta v_g + K_{avs} \Delta I_{fm} \right) \tag{7}$$

$$\Delta v_g = V_{gen}^{*} - V_{gen} \tag{8}$$

$$\Delta I_{fm} = I_{fs}^{*} - I_{fe}^{*} \tag{9}$$

Where, K_{pvs}, K_{ivs}, and K_{dvs} are gains of PID controller. And, K_{avs} denotes the gain of the Anti-windup controller. I_{fs}^{*} is the reference output current of the generator voltage controller. I_{fe}^{*} is the output reference

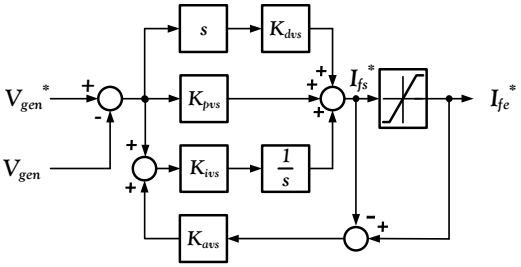

(a) Block diagram of the voltage controller

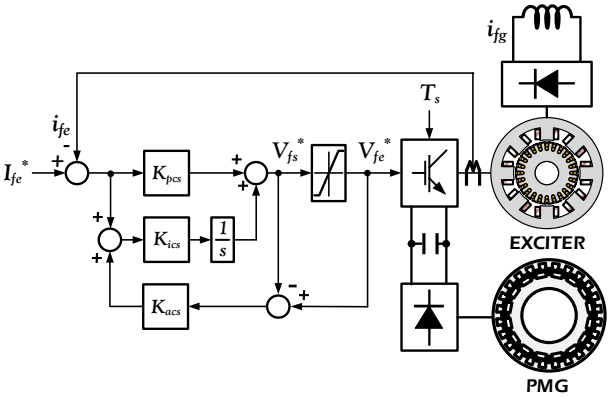

(b) Block diagram of the exciter current controller

Fig. 7. Designed voltage control scheme

exciter field current of the current limiter shown in Fig. 7(a).

I_{fe}^{*} is the reference current of the exciter to generate the proper voltage which effects field winding current of the generator to keep the constant output voltage. The exciter field current controller is designed as follows.

$$V_{fe}^{*} = K_{pcs}\Delta i_{fe} + K_{ics}\int\left(\Delta i_{fe} + K_{acs}\Delta V_{fm}\right) \quad (10)$$

$$\Delta i_{fe} = I_{fe}^{*} - i_{fe} \quad (11)$$

$$\Delta V_{fm} = V_{fs}^{*} - VI_{fe}^{*} \quad (12)$$

where K_{pcs}, K_{ics}, and K_{acs} are gains of PI controller, the gain of the Anti-windup controller. The regulated field current of the exciter is used as the power source of the generator field winding.

5. Experimental Results

In order to verify the proposed generator system, the designed high-efficiency low-power PM generator is manufactured and installed to the designed generator.

Fig. 8 shows the manufactured PM generator and the total experimental configuration.

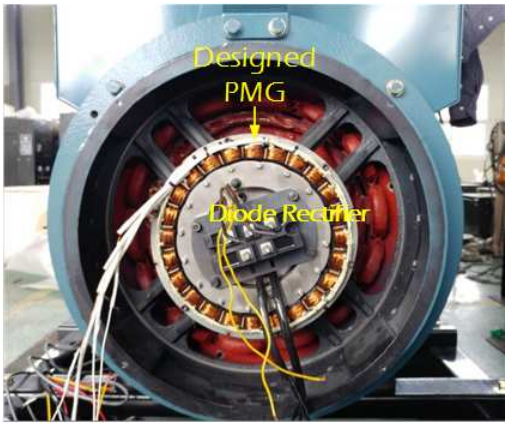

(a) Manufactured PM generator and practical installation

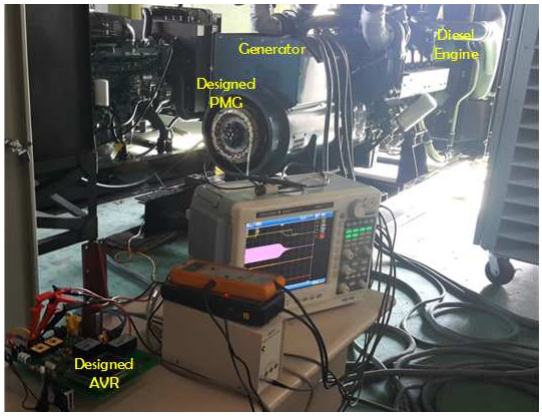

(b) Experimental configurations

Fig. 8. Manufactured PM generator and experimental configurations

Fig. 9 shows the experimental results of the starting characteristics of the conventional generator and the proposed generator system. As shown in compared experimental starting characteristics, it can be observed that the proposed generator system can start well by the designed PM generator power. However, for the conventional generator which is shown in Fig. 9(a), the starting voltage of the generator is slowly reached to the steady-state voltage due to the low residual flux of the generator. The starting time of the generator can be reduced from 14[sec] to 8[sec] in the proposed system.

In the conventional generator system, the excitation power is fed by the output voltage of the generator. At the starting, the generated voltage is very low and, the AVR cannot excite the excite field winding to generate the output voltage. It makes slow starting in the conventional generator system. The output voltage of the generator cannot be reached to the rated voltage during the diesel engine starting shown in Fig. 9(a). And the starting time cannot be guaranteed without an additional battery. However, the designed low-power PM generator can started by the diesel engine starting. In the experiments, the

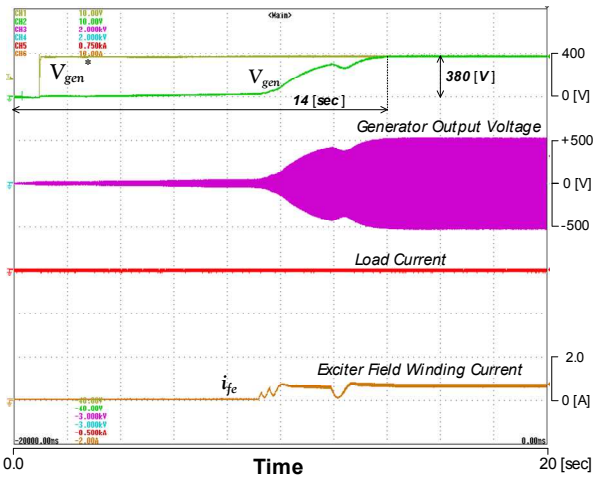

(a) Starting without PM Generator

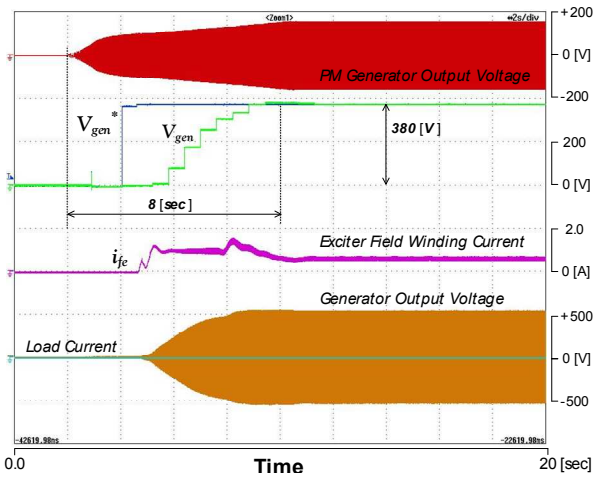

(b) Starting with the proposed PM Generator

Fig. 9. Compared Experimental results at initial starting

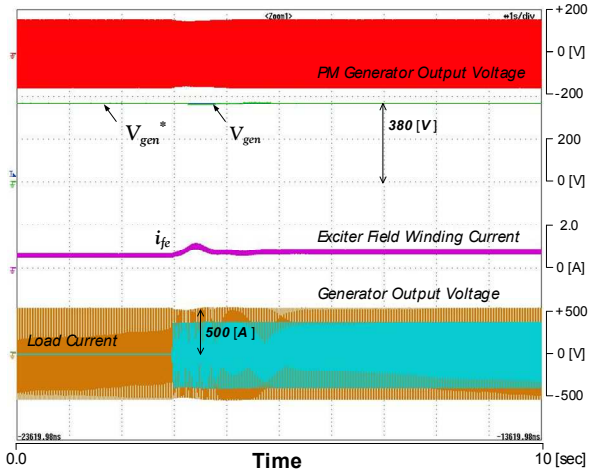

(a) Sudden load injection

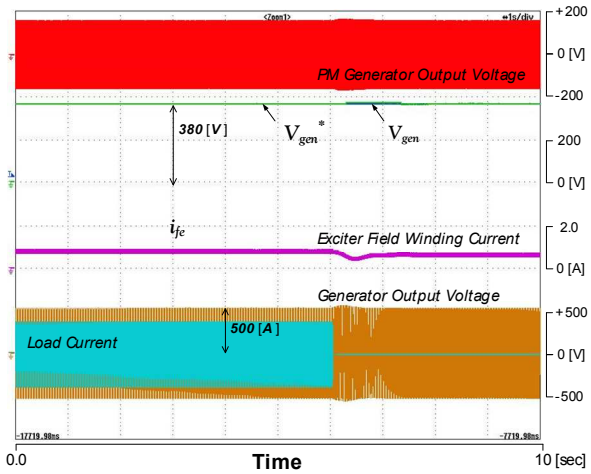

(b) Sudden load rejection

Fig. 10. Experimental results at the load variation

diesel engine can reach the rated speed at 8[sec]. And the proposed generator system can reach the rated output voltage before the rated engine speed shown in Fig. 9(b).

Fig. 10 shows the operating characteristics of the proposed generator system during the sudden load variation. The 200 kW load is injected and rejected directly. The voltage ripple is less than 5 % during 0.4 s. The voltage ripple and settling time are the same as the conventional generator system. And the performance is dependent on the AVR controller. The output voltage of the designed PM generator is changed according to the engine speed and exciter field current, but it can keep the enough value to excite and operate the exciter and AVR.

Fig. 11 is the steady-state condition at the 200 kW load. In this figure, the output voltage of the designed PM generator is constant at the constant engine speed. The THD of the output voltage is 0.38 % at the load condition. The THD obtained by FEM is 0.32 %, which is almost the same as the experimental result.

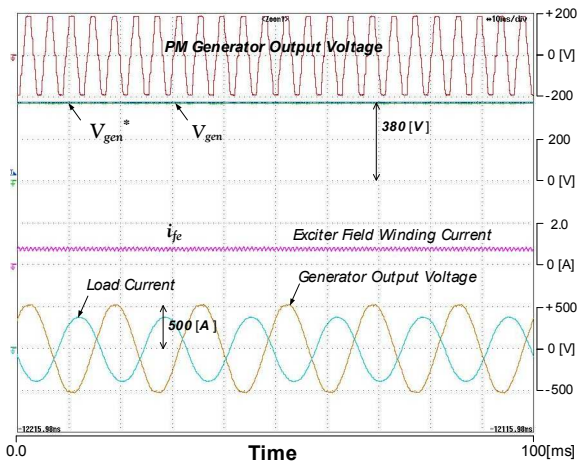

Fig. 11. Experimental result at steady-state

Fig. 12 shows the parallel operating of the designed generator system. In Fig. 12(a), the first generator (Generator 1) is operating, the second generator is started

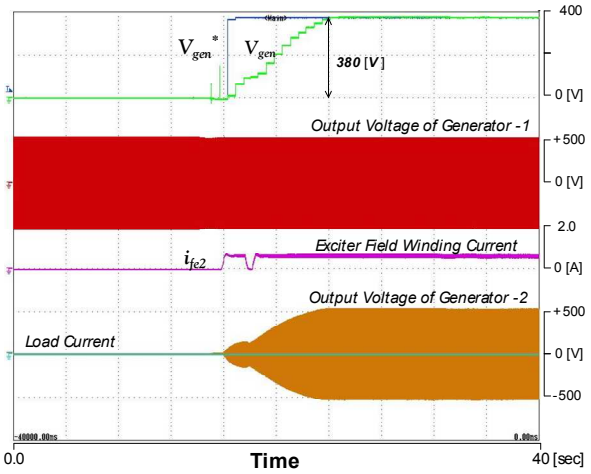

(a) Starting of parallel operating

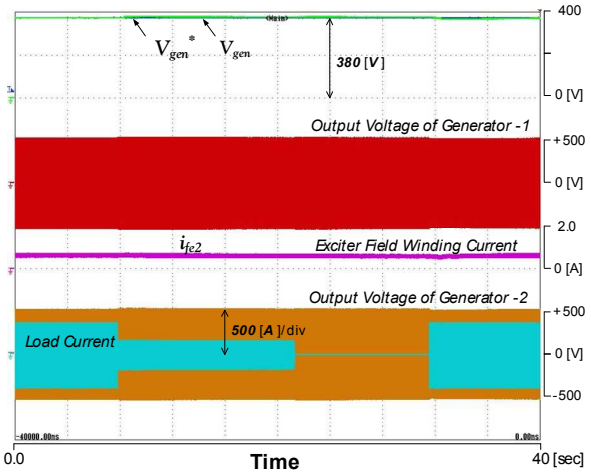

(b) Load variation in the parallel operating

Fig. 12. Experimental result of parallel operating

to adjust the output voltage and frequency together afterwards. After the second diesel engine started, the second generator can keep and adjust the output voltage and frequency during the starting time of the diesel engine as shown in Fig. 12(a). In Fig. 12(b), the sudden load is changed from 200 to 100 kW at the parallel operating condition. It can be seen that the voltage ripple is less than 2 % and lower than the stand-alone case which is shown in Fig. 10 due to the parallel load burden. In the parallel operating, the constant output voltage is well kept by using the proposed generator system without the circular current between two generators.

Because of the rotating characteristics, the actual efficiency of the designed PM generator cannot be directly measured. The total efficiency of the generator is tested in the conventional generator system which has PT. And the efficiency of the proposed system is compared to the conventional system. Table 4 denotes the tested efficiencies of two generator system according to the load conditions. In the tests, the main generator and the exciter are the same.

Table 4. Experimental efficiency

Load conditions	22%	52%	100%
Conventional Generator	93.80	96.84	97.01
Proposed Generator	93.81	96.84	97.02

In the proposed system, only the designed PM generator is installed and PT is removed in the generator. As shown in Table 4, the efficiency of the proposed generator system is almost same as the conventional generator system. But, the additional PT and starting battery can be removed in the proposed generator system with fast starting characteristics.

6. Conclusions

In this paper, a high-efficiency low-power PM generator has been presented to improve the starting characteristics of the generator. Compared with the conventional generator, the emergency battery and power transformer for the AVR have been removed, so that the total system is simple than the conventional generator system. Because of the low-power PM generator, the total efficiency is almost same, but the starting time without an additional battery is reduced from 14[sec] to 8[sec] which is same as diesel engine starting time. The power supply for the AVR has been replaced by the proposed low-power PM generator. Because the AVR can operate by the proper voltage of the designed low-power PM generator, the emergency battery is not required. From the experimental results, the proposed system has better starting characteristics with stable load variation and parallel operating condition.

Acknowledgements

This research was supported by The Future Planning (NRF-2016H1D5A1910536) and “Human Resources Program in Energy Technology” of the Korea Institute of Energy Technology Evaluation and Planning (KETEP), granted financial resource from the Ministry of Trade, Industry & Energy, Republic of Korea. (No. 20164010200940) and Basic Science Research Program through the National Research Foundation of Korea(NRF) funded by the Ministry of Education(NRF-2018R1D1A1B07043989).

References

[1] S. Nuzzo, M. Calea, C. Gerada, N. Brown, “Analysis, Modeling, and Design Considerations for the Excitation Systems of Synchronous Generators,” *IEEE Trans. on Industrial Electronics*, vol. 65, no. 4, pp. 2996-3007, 2018.

[2] Selami Kesler, Tayyip L. Doser, “A Voltage Regulation System for Independent Load Operation of Stand

Alone Self-Excited Induction Generators," *JOURNAL OF POWER ELECTRONICS*, vol. 16, no. 5, Sept. 2016, pp. 1869-1883.

[3] YeonJun Jo, Jin-Woo Ahn, Dong-Hee Lee, "Control of a High Efficiency Generator with Exciter using Frequency Weight Factor," 2017 20th Internal Conference on Electrical Machines and Systems(ICEMS), pp. 1-6, 2017.

[4] E. Rebollo, C. A. Platero, F. Blazquez, R. Granizo, "Internal Sudden Short-circuit Response of a New HSBDS for Brushless Synchronous Machines Tested on a 15 MVA Generator," *IET Electric Power Applications*, vol. 11, no. 4, pp. 495-503, 2017.

[5] J. K. Noland, F. Evestedt, J. J. Perez-Loya, J. Abrahamsson, U. Lundin, "Design and Characterization of a Rotating Brushless Outer Pole PM Exciter for a Synchronous Generator," *IEEE Trans. on Industry Applications*, vol. 53, no. 3, pp. 2016-2027, 2017.

[6] J. K. Noland, F. Evestedt, J. J. Perez-Loya, J. Abrahamsson, U. Lundin, "Comparison of Thyristor Rectifier Configurations for a Six-Phase Rotating Brushless Outer Pole PM Exciter," *IEEE Trans. on Industrial Electronics*, vol. 65, no. 2, pp. 968-976, 2018.

[7] J. K. Noland, K. B. Hjelmervik, U. Lundin, "Comparison of Thyristor-Controlled Rectification Topologies for a Six-Phase Rotating Brushless Permanent Magnet Exciter," *IEEE Trans. on Energy Conversion*, vol. 31, no. 1, pp. 314-322, 2016.

[8] J. K. Noland, F. Evestedt, J. J. Perez-Loya, J. Abrahamsson, U. Lundin, "Testing of Active Rectification Topologies on a Six-Phase Rotating Brushless Outer Pole PM Exciter," *IEEE Trans. on Energy Conversion*, vol. 33, no. 1, pp. 59-67, 2018.

[9] S. Zhu, C. Liu, K. Wang, Y. Hu, Y. Ning, "Theoretical and Experimental Analyses of a Hybrid Excitation Synchronous Generator with Integrated Brushless Excitation," *IET Electric Power Applications*, vol. 10, no. 4, pp. 258-267, 2016.

[10] Z. Zhang, Y. Liu, B. Tian, W. Wang, "Investigation and Implementation of a New Hybrid Excitation Synchronous Machine Drive System," *IET Power Applications*, vol. 11, no. 4, pp. 487-494, 2017.

[11] F. Yao, Q. An, X. Gao, L. Sun, T. A. Lipo, "Principle of Operation and Performance of a Synchronous Machine Employing a New Harmonic Excitation Scheme," *IEEE Trans. on Industry Applications*, vol. 51, no. 5, pp. 3890-3898, 2015.

[12] F. Yao, Q. An, L. Sun, T. A. Lipo, "Performance Investigation of a Brushless Synchronous Machine With Additional Harmonic Field Windings," *IEEE Trans. on Industrial Electronics*, vol. 63, no. 11, pp. 6756-6766, 2016.

[13] N. Jiao, W. Liu, Z. Zhang, T. Meng, J. Peng, Y. Jiang, "Field Current Estimation for Wound-Rotor Synchronous Starter-Generator With Asynchronous Brushless Exciters," *IEEE Trans. on Energy Conversion*, vol. 32, no. 4, pp. 1554-1561, 2017.

[14] N. Jiao, W. Liu, T. Meng, J. Peng, S. Mao, "Design and Control of a Two-Phase Brushless Exciter for Aircraft Wound-Rotor Synchronous Starter/Generator in the Starting Mode," *IEEE Trans. on Power Electronics*, vol. 31, no. 6, pp. 4452-4461, 2016.

[15] N. Jiao, W. Liu, Z. Zhang, T. Meng, J. Peng, S. Mao, "Detailed Excitation Control Methods for Two-Phase Exciter of the Wound-Rotor Synchronous Starter/Generator in the Starting Mode," *IEEE Trans. on Industry Applications*, vol. 53, no. 1, pp. 115-123, 2017.

[16] A. Griffo, R. Wrobel, P. H. Mellor, J. M. Yon, "Design and Characterization of a Three-Phase Brushless Exciter for Aircraft Starter/Generator," *IEEE Trans. on Industry Applications*, vol. 49, no. 5, pp. 2016-2115, 2013.

Chong Hyun Cho He was born on May 4, 1979 and received his B.S., M.S., and Ph.D. degrees in Aerospace Engineering from Gyeongsang National University, Jinju, Korea, in 2004, 2006, and 2010, respectively. He worked as Korea Institute of Industrial Technology (KITECH) from 2010 to 2013. Since 2013 he has been with Suntech Co. LTD, Suncheon, Korea, as CTO. His major research field is the high efficiency generator and renewable energy

Dong-Hee Lee He was born on November 11, 1970 and received his B.S., M.S., and Ph.D. degrees in Electrical Engineering from Pusan National University, Busan, Korea, in 1996, 1998, and 2001, respectively. He worked as a senior researcher of the Servo R&D Team at OTIS-LG from 2002 to 2005. Since 2005, he has been with Kyungsung University, Busan, Korea, as a professor in the Department of Mechatronics Engineering. His major research field is the high efficiency generator and electrical motor drive with power electronics.