http://www.calsec.or.kr/jsebs
ISSN: 2288-3908

The Journal of Society for e-Business Studies
Vol.19, No.4, November 2014, pp.205-229
http://dx.doi.org/10.7838/jsebs.2014.19.4.205

지속가능한 웹 기술 수용에 영향을 미치는 요인에 관한 연구 : 친사회적 행동 관점

Factors Affecting Sustainable Web Technology Adoption : Pro-social Behavior Perspectives

김선희(Sunhee Kim)*, 권오병(Ohbyung Kwon)**

초 록

오늘날 지속가능성을 위한 사업 기회 창출을 위해 지속가능한 정보기술에 대한 수용이 사회적으로 미치는 영향에 대한 연구가 절실함에도 불구하고, 환경적 영향 요인 외의 여러 사회적 영향 요인들에 대한 연구는 많이 이루어지지 않았다. 본 연구에서는 지속가능한 웹 기술 환경에서 소비자의 친사회적 행동이 지속가능한 정보기술 수용에 미치는 요인들을 탐구한다. 그리고 지속가능한 정보기술 개념에 대한 이론적 근거는 사회적 교환 이론에 두었다. 이론적 근거를 토대로 지속가능한 웹 서비스 신기술에 대한 소비자들의 사용 의도를 실증적으로 검증하였다. 실증적 연구 결과, 소비자들은 자신들이 웹 기술 서비스의 사회적 책임성과 사회적 유용성을 고려하여 수용 선택을 하는 것으로 나타났다. 본 논문은 지속가능한 정보 기술의 수용에 있어서 해당 기술이 가진 사회적 특성과 영향력을 처음으로 실증적으로 검증한 연구이다. 아울러 지속가능한 정보기술의 초기 도입 단계 수용에서 기술의 사회 책임적 특성과 유용성을 인식하는데 있어 소비자의 친사회적 성향이 중요한 선행 요인으로 작용한다는 것을 본 연구를 통해 밝혔다.

ABSTRACT

Examination of the various impact factors on adoption sustainable IT can influence on the potential for creating sustainable businesses in today's society. However, the societal factor out of environmental factors, which stimulates customer intention to use sustainable IT, has seldom been investigated. In this paper, we examine the adoption of sustainable web technology from the pro-social behavior perspective. The concept of sustainable IT is theoretically examined based on social exchange theory. An empirical investigation is conducted into customer intention to use new sustainable IT. The results indicate that customers care about the social responsibility and usefulness of the sustainable IT-based services they choose. In this study, the social features of web technology and their influences on adoption are verified empirically for the first time. In addition, pro-sociality is identified

* Department of Management, Kyung Hee University, Seoul(sunheekim@khu.ac.kr)
** Corresponding Author, School of Management, Kyung Hee University, Seoul(obkwon@khu.ac.kr)
2014년 09월 29일 접수, 2014년 11월 10일 심사완료 후 2014년 11월 18일 게재확정.

as necessary to a perception of the socially responsible features of information technology. Furthermore, pro-social adoption behavior in the beginning stages of sustainable IT use is elucidated.

키워드 : 수용 행동, 지속가능한 정보 기술, 사회적 유용성, 사회적 교환 이론, 친사회적 성향
Adoption behavior, Sustainable it, Social Usefulness, Social Exchange Theory, Pro-Sociality

1. Introduction

Ethical consumerism, which refers to choices based on social and nontraditional components of products and personal and moral beliefs [7], has existed for centuries, but has only been a small concern in the business world and academia until recently [76]. Accordingly, the social impacts and contributions of web technology have attracted increased academic interest. Today's web technology is integral to modern business practice, generating competitive business opportunities at the organizational level and supporting social practices [48]. Therefore, its influences extend beyond personal and organizational efficiency [60]. Web technology developers must consider social problems such as poverty, global warming, and knowledge gaps, which are all indicators of the unsustainable nature of modern society [16, 55, 61]. People who care about these social problems prefer businesses that provide services and products that are responsible to the community and society, not just those that enhance personal satisfaction [16, 38].

Following this social trend, research on the sustainability of IT including web technology has steadily increased in recent years. Sustainable IT refers to "the application of IT knowledge and technology for the benefit of customers and other stakeholders to enhance long-term mutual economic, environmental, and social well-being" [28, p. 6]. Sustainable IT is more than just green IT in that its impact on society is a more important consideration than with green IT, and the importance of the impact of IT on stakeholders and society rather than companies and their customers is highlighted.

So far, research on sustainable IT has adopted an environmental approach in the name of all things "green" [3, 13, 28, 29, 73]. Sustainable IT research must therefore be distinguished from research with a green theme because of its focus on societal rather than environmental influence. Though firms adopting green IT or green information systems (IS) have primarily focused on the environmental impact of their business practices, their ultimate goal in cutting energy costs is to increase business value through energy effi-

ciency and efficient utilization of IT equipment [48, 64, 73], not necessarily to benefit society or the environment. Thus, sustainable IT has been frequently studied in the management IS and social informatics fields [35, 29].

In this paper, specifically focusing on web technology, customer intention to use sustainable IT is investigated in its beginning stage from a new angle. In the beginning stage, since the expected benefits of adopting sustainable IT are unclear, adoption behavior cannot be easily explained by the usefulness to an individual or ease of use of a product. Social exchange theory (SET) is utilized in our research model to explain adoption behavior when individual and organizational utility or benefit is not obvious. Social features of web technology, users' perceptions of it, and personal traits are incorporated into the model. In addition, a new construct, pro-sociality, is defined. Two other constructs, perceived social responsibility and perceived social usefulness, improve our understanding of sustainable IT adoption; we measure the former as how much the user thinks that adoption of the web technology demonstrates social responsibility and the latter as how much the web technology makes the user feel that he or she is contributing to the well-being of society as a whole. We distinguish perceived usefulness into perceived social usefulness and perceived personal usefulness to examine in detail the impact of social features of sustainable IT. Furthermore, we use perceived security, perceived (personal) usefulness and perceived ease of use as controlled variables.

2. Theoretical background and Hypothesis

2.1 Social Exchange Theory

To elucidate the behavior surrounding sustainable IT adoption, a research model is proposed in this study, as shown in <Figure 1>. Social Exchange Theory (SET) is used as the main structure of the proposed model. As a core element of belief and individual customer trait, pro-sociality was selected for use in this study. Stronger pro-sociality results in voluntary actions to benefit others without self-incentive, actions such as sharing, donating, caring, comforting, and helping [8, 52].

Social exchange theory (SET) embraces the fundamental concepts of modern economics as a foundation for analyzing behavior and relationships to determine the complexity of social structures. According to Homans [30], the initiator of the theory, SET views interpersonal interactions from a cost-benefit perspective, similar to an economic exchange except that social exchange involves intangible social costs and benefits (such as respect, honor, friendship, and caring) and is not governed by explicit rules or agreements [25].

The main difference between social and economic exchanges is that a social exchange involves no guarantee of reciprocal reward in return for investment. Unlike in an economic exchange, no rules or agreements govern the interaction. The only "guarantee" in a social exchange is the assumed cooperative intentions of the other party (that is, the belief that the other party will reciprocate as expected) [5, 33] Therefore, in studies of IS, SET has been used to elucidate many motivational factors in business interactions, including new web technology adoption, knowledge sharing, and online cooperation [62].

SET includes several key assumptions; in these, it differs from classic microeconomic theories [27]. First, social exchanges occur in long-term social relationships within communities, whereas "in the market or trading sphere of material life, exchanges are anonymous and socially disarticulated" [26, p. xii]. Customer acceptance of sustainable IT based on its social features in the beginning stage of web technology adoption can be seen as a social exchange. Second, its emphasis on social structure as the specified framework in which exchanges occur and the resultant structural change created through exchange processes distinguishes SET from other perspectives in psychology and economics [49, p. 12]. Drawing on SET, therefore we suggest that user's beliefs, pro-sociality, and the socially responsible features embedded in sustainable IT will be implicated in its adoption.

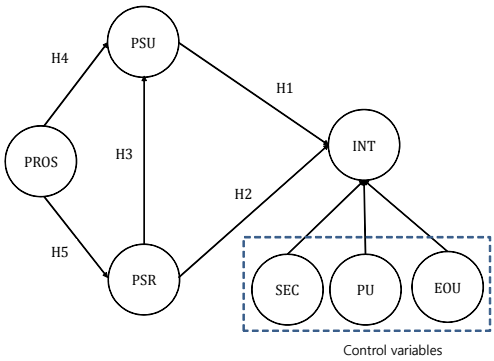

INT : intention to adopt sustainable web technology, PSU : perceived social usefulness, PSR : perceived social responsibility, PROS : pro-sociality, SEC : perceived security, PU : perceived usefulness, EOU : perceived ease of use.

〈Figure 1〉 Proposed Research Model

2.2 Prior Research on Sustainable IT Adoption

As public awareness about environmental sustainability has increased, various regulatory policies for the protection of nature have been introduced [16, 67]. Therefore, firms and business leaders encountering these new business regulations have made efforts to embrace environmental sustainability in their corporate strategies and vision. As a result, green IT and IS have become vital to maintaining business success [72]. Green IT and its associated systems (hereafter, green IT/S) include web technology, systems, and programs that support the natural environment directly or indirectly [32, 64].

Green IT mainly addresses the energy consumption and waste associated with the use of hardware and software. Green IS refers to

the development and use of IS to support or enable environmental sustainability initiatives. Most current research in green IT/S focuses on design, development, or implementation of hardware and software to reduce the negative ecological impact of IT or support ecologically sustainable practices [32]. Some scholars, who have stated that the IS academic community seems ignorant of the challenges of environmentally sustainable IT development, have suggested agendas and frameworks for future green IT/S research [13, 16, 32]. Molla et al. [48] developed a green IT motivation grid in a survey investigation of the driving and inhibiting factors influencing the diffusion and maturity of green IT. They also empirically tested the influence of organizational motivation toward eco-sustainability on the adoption of green IT based on organizational motivation theory [47].

Sustainable information technology goes beyond green IT/S. IT can play a useful, direct role in improving the social welfare of disabled workers and facilitating education for students in poverty [59]. While green IT/S is limited in its focus on the impact of IT on ecological systems, sustainable IT encompasses more areas of society, including people, culture, and the environment, in accordance with the concept of sustainability based on three bottom lines [13, 28] originated by Elkington in 1994. This concept includes three components : the natural environment, society, and economic performance [19, 20]. According to this sustainability concept, sustainable IT including web technology refers to "the application of IT knowledge and technology for the benefit of customers and other stakeholders to enhance long-term mutual economic, environmental, and social well-being" [28]. However, socially responsible features and the usefulness of sustainable IT have not been empirically examined in research to date. To our best knowledge, we couldn't find any empirical research focusing on the impact of social features of sustainable IT other than its environmental impact. The IS academic community seems ignorant of the challenges of sustainable IT, furthermore challenges of sustainable IT development, other than as it impacts the environment.

2.3 Perceived Social Usefulness

In Roberts' [57] previous study on responsible consumer behavior, two interesting points were made. First, some people are willing to take action at a cost based upon an ethical consumer disposition, while others are not. Second, studies of the link between moral judgment and observed behavior reported inconsistent results [56]. These results imply that a mediator may exist between morality and actual moral behavior. Studies based on general technology adoption theories suggest perceived usefulness as the main media-

tor. Therefore, we propose perceived social usefulness as a mediator between attitudes toward and the adoption of sustainable web technology. We posit that users' evaluation of the social effect of products or services will differ from their evaluation of its usefulness to them as individuals, or the degree to which they believe that using a particular system would enhance their job performance [14]. Customers have different opinions as to the helpfulness of the features of sustainable web technology and their ability to provide support to the community regardless of personal benefits. Hence, we define perceived social usefulness as the degree to which a person believes that using a particular system (i.e., sustainable web technology) would resolve social issues or improve society as a whole. While perceived personal usefulness entails the pursuit of personal benefit and well-being, which motivates the customer to investigate a product or service, perceived social usefulness represents the customer's awareness of its social benefits and benefit to society in the real world regardless of its personal benefits.

According to SET, the hypothesis that perceived social usefulness will be associated with adoption intention is consistent with former IT adoption theories because individual adoption of sustainable IT will contribute to the community, and then the improved community will appreciate and reward the individual's effort, albeit in the future. Hence, we hypothesize that :

Hypothesis 1 : Perceived social usefulness will have a positive effect on the intention to adopt an internet service site in which sustainable web technology is embedded.

2.4 Perceived Social Responsibility

The term "perceived social responsibility", which is defined as the perception that a certain product or service is designed and developed to contribute to and improve society, is borrowed from the notion of product social responsibility [1]. Studies on customer perception of products related to social issues have examined the causes and impact of product social responsibility in several areas such as cause-related marketing [68], customer response [6], and social products [2]. These studies primarily examined ethical consumerism, which encompasses the importance of the social features of a company's products and business processes as well as its traditional functional features [1]. Hence, identification of the social functions incorporated in a product or service will reinforce the belief that using a particular web technology would resolve social issues or improve society as a whole. In this paper, this identification is conceptualized as perceived social responsibility.

Prior studies found a positive association between perceived product social responsibility and firm performance in terms of willingness to pay, sales value, and market value, either directly [41, 54] or indirectly [12, 44]. In this paper, we use intention to adopt sustainable IT as a proxy for willingness to pay. Our research model illustrates both direct impact of perceived social responsibility and its indirect impact through perceived social usefulness. In another empirical study, Creyer and Ross [12] found that users perceived that corporate behavior influences perceived product value and is therefore likely to influence market choices. Thus, in this study, perceived product value is mapped onto perceived usefulness of sustainable IT, which influences adoption behavior. Hypothesis 3 postulates about the indirect effect of perceived social responsibility on intention to adopt sustainable IT, while Hypothesis 2 tests the direct effect.

Hypothesis 2 : Perceived social responsibility will have a positive effect on intention to utilize an internet service site in which sustainable web technology is embedded.

Hypothesis 3 : Perceived social responsibility will have a positive effect on the perceived social usefulness of an internet service site in which sustainable web technology is embedded.

2.5 Pro-Sociality

Pro-sociality refers to the tendency to undertake voluntary actions to benefit others without self-incentive, actions such as sharing, donating, caring, comforting, and helping [8]. According to co-construction theory [71], pro-social behavior is also found in the digital world. This implies that pro-sociality affects ethical decision-making in cyberspace. For example, young adults treat their pro-social behaviors in the digital world as an extension of their pro-social dispositions [75]. Hence, pro-sociality can impact perception of the features of websites which embed or are developed by sustainable IT. For example, Google™ adopted reCAPTCHA, a representative sustainable web technology, and incorporated the technology into some of its websites to improve social literacy and make a humanistic contribution. Though it is more costly to use reCAPTCHA to enter the website, some people who appreciate such efforts are not reluctant to use it.

SET can also shed light on the impact of pro-sociality on perception and ethical decision-making. As Chou et al. [11] mentioned, establishing pro-social norms strengthens appreciation of knowledge gained through building relationships and reciprocation, which are the main drivers of social exchange. From the point of view of SET, if customers perceive that using sustainable IT embedded in a website contributes to the improvement of

society, or facilitates knowledge sharing in the case of reCAPTCHA, and that doing so is useful for their status within the social community, then strongly pro-social users will be more likely to perceive such technology as useful for society. Pro-sociality promotes proper and positive web technology use in a socially responsible manner [45]. Hence, we hypothesize that :

Hypothesis 4 : Customer pro-sociality will have a positive effect on the perceived social usefulness of an internet service site in which sustainable web technology is embedded.

Pro-social customers, unlike pro-self people, feel more responsible about their own behaviors and tend to make choices that contribute to social improvement [15, 60]. Various traits, such as strength of attachment [66], are associated with the perception of corporate social responsibility [38]. In this study, we focus on pro-sociality as a trait of some customers that is related to their sense of social responsibility. We hypothesize that pro-social customers consider the salience of social responsibility in their decision-making, including that about sustainable IT.

Hypothesis 5 : Customer pro-sociality will have a positive effect on the perceived social responsibility of an internet service site in which sustainable web technology is embedded.

2.6 Control Variables

Perceived usefulness and perceived ease of use are utilized in this study as control variables for comparison with the social features of web technology : perceived social responsibility and perceived social usefulness. These are the constructs most frequently incorporated in studies based on conventional web technology adoption theories [36]. In addition, we include perceived security as another control variable because adopting a new web technology is often accompanied by security issues [9, 34, 65]. In this study of reCAPTCHA, this variable is particularly relevant because reCAPTCHA was developed based on CAPTCHA, which was originally used to ensure that users entering a website are human, not artificial robots.

The impact of perceived security in online environments has attracted the attention of many scholars [37]. For instance, studies report that perceived security has an indirect positive influence on intention to use online shopping and social network services [22]. In a study about adoption of an online banking application, perceived security indirectly influenced customers' intention to make use of a service [69]. Huang et al. [31] observed that the difference between perceived security and actual security can positively and directly influence intention to use. In this paper, perceived security is compared with perceived social responsibility in

order to control the functional features of reCAPTCHA. It is the same that perceived (personal) usefulness and perceived ease of use are used to control the functional features of sustainable IT in this study.

3. Methodology and Results

3.1 Measurement

Most measures used in this study were drawn from extant literature and adapted to the context of the current study except the two newly defined constructs related to the social features of web technology : perceived social responsibility and perceived social usefulness. Measurement was performed using 7-point Likert-type scales in which the responses ranged from 1 (strongly disagree) to 7 (strongly agree). Some of the items were modified or developed for better fit to the context of this study. During the main analysis, conventional validity and reliability tests were conducted. The validity test for each measurement scale was based on confirmatory factor analysis. All survey items and the results of the confirmatory factor analysis are provided in <Appendix A>.

First, to measure customer perceptions of the social responsibility of internet service websites in which sustainable web technology is embedded, we utilized several instruments from studies related to corporate social responsibility. We adapted the scale used for measurement of product social responsibility in the study of Brown and Dacin [6]. They believe that consumers consider both performance-related associations and perceived social responsibility when evaluating the attributes of products or services [6, 74]. Furthermore, we extracted other items from the instrument measuring employee perceptions of philanthropic activities related to perceived social responsibility in the study of Lee et al. [38], which makes use of the measurement tools in the studies of Lichtenstein et al. [42] and Maignan and Ferrell [46]. In total, five items are used in this study to measure perceived social responsibility.

Second, to measure customer perceptions of perceived social usefulness of internet service websites in which sustainable web technology is embedded, we developed 15 items appropriate to the definitions of the constructs and purpose of this study. All items passed reliability and validity tests and were used in the final research model.

Penner et al. [51, 53] developed the Pro-Social Personality Battery (PSB) as a tool to measure pro-social tendencies based on the perspective that pro-social behaviors are induced by individual personality traits, not by contextual cognition. According to the PSB, pro-social behavior consists of two categories of personality traits : other-oriented empathy (individual social responsibility, empathic concern, perspective taking, and moral

reasoning) and helpfulness (personal distress and self-reported altruism). While other-oriented empathy is referred to as a tendency to feel empathy and concern for others, helpfulness is a tendency to perform helpful acts based on past experiences [53]. Among the possible traits to include, helpfulness was disregarded because pro-sociality in the context or our study cannot depend on past individual experience. When it comes to other-oriented empathy, elements other than moral reasoning are not directly related to human belief systems. Hence, among the original full scale of the PSB, which consisted of 56 items, only those related to the moral reasoning aspect of pro- sociality were included as compatible with the theoretical basis of the proposed research model (i.e., SET). Thus, six items related to moral reasoning were used in the survey.

3.2 Data Collection

For the empirical investigation, survey data were randomly collected on online from web service users by a data survey agency. The period for data collection was from 2013-01-02 to 2013-01-10. The reCAPTCHA system used by Google was chosen to test the impact of socially responsible features of sustainable IT on its adoption. reCAPTCHA has become one of the most widely accepted technologies used in the process of digitizing books and other reading materials in addition to its primary function of security. Survey respondents were provided with thoughtful explanations in conjunction with images about reCAPTCHA before entering their responses. We also provided respondents with a framing message to describe the social features of reCAPTCHA. Then participants were asked to answer both positively and negatively framed questions about reCAPTCHA as a form of sustainable IT.

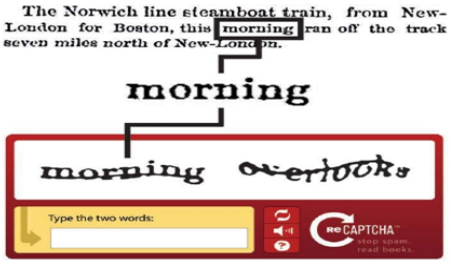

〈Figure 2〉 reCAPTCHA Example

The results of a pre-pilot test revealed no distinction between responses to these two types of questions associated with customer perceptions of sustainable IT. Thus, the consistency and robustness of the study results were assured regardless of the effects of message framing. For elimination of the effects of gender and age differences, the data were evenly distributed by gender and age in our analysis. The total sample included 520 responses.

<Table 1> shows the demographic information about the survey respondents. Information about respondents' previous experience with CAPTCHA and reCAPTCHA is

listed in <Tables 2> and 3, respectively. Usage of reCAPTCHA, which was developed and commercialized relatively recently, is lower than that of CAPTCHA in every category. In this study, we therefore assume that this sustainable technology is in the beginning stage of its development and usage.

〈Table 1〉 Demographic Information about Respondents

Measure	Item	n	%
Gender	Male	260	50
	Female	260	50
Age	20s	130	25
	30s	130	25
	40s	130	25
	50s or higher	130	25
Education	High school or less	85	16
	University student	25	6
	University graduate	364	70
	Graduate school student	46	8
Job	Student	34	7
	Employee	305	59
	Specialist	69	13
	Housewife	70	13
	Unemployed	20	4
	Other	22	4
Total	Total	520	100

〈Table 2〉 Experience with CAPTCHA in the Previous 6 Months

Number of CAPTCHA experiences	n	%
None	70	13
1~2	111	21
3~5	142	27
6~10	99	19
11~30	87	17
> 31	11	3
Total	520	100

〈Table 3〉 Experience with reCAPTCHA in the Previous 6 Months

Number of reCAPTCHA experiences	N	%
None	216	41
1~2	148	28
3~5	81	16
6~10	40	8
11~30	24	5
> 31	11	2
Total	520	100

3.3 Validation

For the analysis, we chose the partial least squares (PLS) structural equation model, as it allows latent constructs to be modeled either as formative or reflective indicators [10], which fit well with our data. In addition, PLS is a structural equation modeling technique that simultaneously assesses the reliability and validity of the measures of theoretical constructs and verifies the relationship among these constructs. In general, PLS is better suited for explaining complex relationships than some other methods, as it avoids two serious problems: inadmissible solutions and factor indeterminacy [23].

To assess the reliability of the items, we checked the composite reliability values provided by PLS, which reflect the internal consistency of a given block of indicators. The recommended value for determining the reliability of constructs is 0.7 [10]. Appendix A shows that composite reliability values ranged

from 0.849 to 0.962, which was within acceptable levels.

In order to validate our model, three types of validity were assessed : content validity, convergent validity, and discriminant validity. Content validity was established by ensuring consistency between the measurement items used in the model and those available in the extant literature. Pre-pilot testing of instruments was also done in this study. We assessed convergent validity by examining the factor loading from the confirmatory factor analysis. Lastly, we checked average variance extracted (AVE) to test for discriminant validity. For the AVE of a measure, a score above 0.5 indicates acceptability [24]. Appendix A also shows that AVE values ranged from 0.717 to 0.815; these values exceed the minimum acceptable value.

3.4 Results

The hypothesized relationships in the theoretical model were estimated and are summarized in <Figure 3>. The explanatory power of the structural model is evaluated by looking at the R^2 values of the final dependent constructs. As observed in <Figure 3>, the R^2 values were obviously significant.

We proposed a positive relationship between perceived social responsibility and intention to use the sustainable IT known as reCAPTCHA (Hypothesis 2). While the analysis result shows no significant direct relationship, an indirect link between these two constructs was clarified through perceived social usefulness. Therefore, our hypothetical expectation was partially supported. The relationship between perceived social responsibility and perceived social usefulness was strong and positive. The link between perceived social usefulness and intention to use sustainable IT was also strongly positive. Therefore, both Hypotheses 1 and 3 were strongly supported. Hypothesis 5 proposed a link between pro-sociality and perceived social responsibility. The path was strongly positive and significant, as expected. Hypothesis 4 also proposed a positive relationship between pro-sociality and perceived social usefulness. A positive and significant relationship is also observed here. Therefore, Hypothesis 4 was supported.

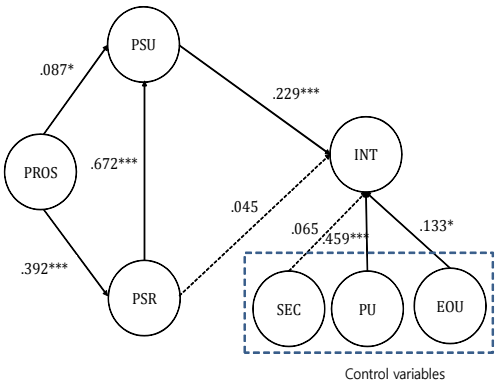

*** $p < 0.001$, ** $p < 0.01$, * $p < 0.05$.
INT : intention to adopt sustainable IT, PSU : perceived social usefulness, PSR : perceived social responsibility, PROS : pro-sociality, SEC : perceived security, PU : perceived usefulness, EOU : perceived ease of use

〈Figure 3〉 Research Results

In the analysis of the control variables, a positive relationship was seen between perceived usefulness and perceived ease of use with intention to use sustainable IT, as expected. However, no significant relationship was found between perceived security and intention to use sustainable IT. This finding is interesting and worth discussion.

4. Discussion and Conclusion

4.1 Main Findings

We examine the effects of pro-social traits and user's perception of both social responsibility and social usefulness on adoption of sustainable IT and the resulting adoption behavior according from SET perspectives.

The results show that perceived social usefulness directly affects adoption behavior of sustainable IT, while perceived social responsibility indirectly affects adoption behavior via perceived social usefulness. Furthermore, we found that pro-sociality, which has not been considered in management IS research, is positively associated with perceived usefulness and perceived social responsibility. The results are consistent with implication of research on the determinants of ethical consumerism in marketing field research. They affirmed the existence of a pro-social customer segment which favors ethical products and ethical business processes. This pro-social group may play a strategic role as initiators or expanders of the new market for sustainable IT. Therefore, companies considering adoption of sustainable IT-based products or use of services such as reCAPTCHA should select pro-social customers as their preferred target market. Those pro-social customers who are generous and active in charitable activities or making or donations may also evaluate IT technology-based products or services positively. This is true of the sustainable IT in this study, reCAPTCHA; some users were more willing to accept reCAPTCHA because of its contribution to the digitization of human knowledge and potential to improve society [71].

The result that intention to use sustainable IT is determined by the expected future benefits of using sustainable IT is in accordance with SET. The expected benefit or reward of social exchange differs from that of the personal usefulness emphasized in studies based on traditional adoption theories. Perceived social usefulness is based on long-term relationships with and trust in sustainable IT; customers feel that if they adopt sustainable IT, their community and society will be rewarded even if the reward would not be their own. This belief may be stronger if the developer of the sustainable IT is trustworthy. For example, reCAPTCHA may be perceived as more socially useful because it is made by Google. According to SET, customers with

strong relationships with sustainable IT require no explicit rules or agreements that secure a future reward. Rather, they value the exchange of intangible social costs and benefits (such as respect, honor, friendship, and caring). This is related to their deep belief that socially responsible features of sustainable IT will improve society in the future.

As expected, the control variables perceived usefulness and perceived ease of use affected the intention to adopt sustainable IT. This finding reconfirms the significance of the findings of studies based on conventional web technology adoption theories, and shows the compatibility of our research model with those theories. Furthermore, the results show that conventional IT adoption models may be improved by the addition of pro-sociality and perceived social usefulness to the model. By contrast, perceived security had no affect on adoption behavior. This result suggests that the users adopt reCAPTCHA because it is a sustainable IT, not just security technology.

CAPTCHA, the previous version of reCAPTCHA, was originally designed to ensure the login identity of the user. Previous users of CAPTCHA may have perceived this technology to be useful for security purposes. However, for reCAPTCHA, the results for perceived security were also not significant in explaining adoption behavior. This implies that the users regarded reCAPTCHA as sustainable IT, not just a security tool. Hence, no confounding effects of using both CAPTCHA and reCAPTCHA seem to be present, and the differences between CAPTCHA and reCAPTCHA were controlled, as intended in our study.

Finally, weak relationship between perceived social responsibility and intention to adopt can be explained by the prior research about consumer's pro-social behavior. Osterhus [50], who examined factors affecting adoption of socially responsible products, found that normative influences are not automatically linked to behavior. In fact, people are more strongly influenced by personal rewards than personal norm [57]. Therefore, attribution of responsibility has moderating effect on intention of consumer. These results are consistent with the results of our study in that they show that individual beliefs and moral reasoning (i.e. perceived social responsibility) indirectly affect the adoption of social products. Moreover, those prior research imply that consumers strongly consider costs and benefits (in both of individual and societal) before buying social products, which is well fitted to the cost-benefit perspective based on SET utilized here.

The results of this study imply that users are willing to adopt sustainable IT that is not useful to them in the short term, although they incur a cost in terms of time to use the system, and the benefits will be realized in the future. This finding is easily explained by SET, but not easily understandable from the points of view of self-efficacy and anticipated contribution. It is worthy of attention given

the potentially significant market gains offered by emerging sustainable IT.

4.2 Limitations

Although the results of this study provide a useful foundation for future research regarding pro-social consumer behavior and sustainable IT adoption, it does have some limitations. We initially intended to examine the effects of message framing on consumers' perceptions of the social features of sustainable IT because prior studies reported that individuals place more weight on negative information than positive information when forming opinions about a product. However, we found no difference between positively and negatively framed messages in this study. The nature of the social features of the sustainable IT examined in this study may have influenced this result, because contributing to the digitization of human knowledge is not a sensitive and urgent issue in our society. Therefore, studies including other sustainable IT with different social features related to such controversial issues as labor practices or animal rights may yield different results. Furthermore, the degree of detail about the social features may have been another factor influencing consumer attitudes toward sustainable IT.

In this study, reCAPTCHA was used as a proxy for sustainable IT, and pro-sociality was identified as a clear antecedent to adoption of sustainable IT in its beginning stage. However, other forms of sustainable IT may provide users with different experiences, which could possibly affect their online behaviors. Moreover, antecedent factors other than pro-sociality such as ideology, reputation, and fun may also influence adoption of sustainable IT. This is also a topic for future research.

4.3 Conclusion

We focus specifically on the contribution of sustainable IT to society as distinct from green IT and its environmental impact. Empirical academic studies on management IS and theoretical investigations of the social aspects of web technology are still needed. The results of this study are valuable as an introduction to and foundation for this area of research. Theoretical definitions of sustainable IT and its related constructs (perceived social responsibility and perceived social usefulness) are provided, and measurement instruments are presented that will be useful for further research. The proposed model differs from previous IT adoption models which focus on environmental factors and their influence [13, 28], in that we include the social features of sustainable IT to investigate their influences on customer's behavior intention. This study views the socially responsible features of web technology from a new angle, which allows a comprehensive understanding of web technology and the factors influencing its adoption

because it considers the social responsibility and social usability aspects of web technology, as well as its personal usability and availability. This perspective is unique in research on web technology adoption, which has mainly focused on the effectiveness and productivity of web technology in economic or utilitarian terms and on personal and corporate levels.

Other extensive studies can be conducted using various forms of sustainable IT. Finally, we recommend the consideration of applications of sustainable IT to CSR practices and sustainability activities. Governments may base relevant regulations not only on the green impact of web technology, but also on its societal influences, based on the findings presented here.

References

[1] Auger, P., Burke, P., Devinney, T. M., and Louviere, J. J., "What will consumers pay for social product features?," Journal of Business Ethics, Vol. 42, No. 3, pp. 281-304, 2003.

[2] Auger, P., Devinney, T. M., Louviere, J. J., and Burke, P. F., "Do social product features have value to consumers?," International Journal of Research in Marketing, Vol. 25, No. 3, pp. 183-191, 2008.

[3] Avital, M., Lyytinen, K., King, J. L., Gordon, M. D., Granger-Happ, E., Mason, R. O., and Watson, R. T., "Leveraging Information Technology to Support Agents of World Benefit," Communications of the Association for Information Systems, Vol. 19, 2007.

[4] Bhattacherjee, A., "Understanding information systems continuance : an expectation-confirmation model," MIS Quarterly, Vol. 25, No. 3, pp. 351-370, 2001.

[5] Blau, P. M., "Exchange and power in social life," Transaction Publishers, 1964.

[6] Brown, T. J. and Dacin, P. A., "The company and the product : corporate associations and consumer product responses," The Journal of Marketing, pp. 68-84, 1997.

[7] Bucic, T., Harris, J., and Arli, D., "Ethical consumers among the millennials : A cross-national study," Journal of Business Ethics, Vol. 110, No. 1, pp. 113-131, 2012.

[8] Caprara, G. V., Alessandri, G., and Eisenberg, N., "Prosociality : the contribution of traits, values, and self-efficacy beliefs," Journal of Personality and Social Psychology," Vol. 102, No. 6, p. 1289, 2012.

[9] Chellappa, R. K. and Pavlou, P. A., "Perceived information security, financial liability and consumer trust in electronic commerce transactions," Logistics Information Management, Vol. 15, No. 5/6, pp. 358-368, 2002.

[10] Chin, W. W., "Commentary : Issues and

opinion on structural equation modeling," 1998.

[11] Chou, S. W., Lee, C. C., Chang, Y. C., and Lin, C. T., "Understanding continuance intention of knowledge creation in online communities from a social-psychological perspective," In System Sciences, HICSS' 09. 42nd Hawaii International Conference on (pp. 1-10), IEEE, 2009.

[12] Creyer, E. H. and Ross Jr, W. T., "The impact of corporate behavior on perceived product value," Marketing Letters, Vol. 7, No. 2, pp. 173-185, 1996.

[13] Dao, V., Langella, I., and Carbo, J., "From green to sustainability : Information Technology and an integrated sustainability framework," The Journal of Strategic Information Systems, Vol. 20, No. 1, pp. 63-79, 2011.

[14] Davis, F. D., "Perceived usefulness, perceived ease of use, and user acceptance of information technology," MIS Quarterly, Vol. 13, No. 3, pp. 319-340, 1989.

[15] De Cremer, D. and Van Lange, P. A., "Why prosocials exhibit greater cooperation than proselfs : The roles of social responsibility and reciprocity," European Journal of Personality, Vol. 15, pp. 5-18, 2001.

[16] Dedrick, J., "Green IS : Concepts and Issues for Information Systems Research," Communications of the Association for Information Systems, p. 27, 2010.

[17] Dewett, T. and Jones, G. R., "The role of information technology in the organization : a review, model, and assessment," Journal of Management, Vol. 27, No. 3, pp. 313-346, 2001.

[18] Eagly, A. H. and Chaiken, S., "The Psychology of Attitudes," Harcourt Brace Jovanovich College Publishers, 1993.

[19] Elkington, J., "Enter the triple bottom line," The Triple Bottom Line : Does It All Add Up, pp. 1-16, 2004.

[20] Elkington, J., "Towards the Sustainable Corporation : Win-Win-Win Business Strategies for Sustainable Development," California Management Review, Vol. 36, No. 2, pp. 90-100, 1994.

[21] Fishbein, M. and Ajzen, I., "Belief, Attitude, Intention, and Behavior : An Introduction to Theory and Research. Reading," MA : Addison-Wesley, 1975.

[22] Flavián, C. and Guinalíu, M., "Consumer trust, perceived security and privacy policy : three basic elements of loyalty to a web site," Industrial Management and Data Systems, Vol. 106, No. 5, pp. 601-620, 2006.

[23] Fornell, C. and Bookstein, F. L., "Two structural equation models : LISREL and PLS applied to consumer exit-voice theory," Journal of Marketing Research, Vol. 19, No. 4, 1982.

[24] Fornell, C. and Larcker, D. F., "Evaluating structural equation models with unobservable variables and measurement error," Journal of Marketing Research,

Vol. 18, No. 1, 1981.

[25] Gefen, D. and Ridings, C. M., "Implementation team responsiveness and user evaluation of customer relationship management : A quasi-experimental design study of social exchange theory," Journal of Management Information Systems, Vol. 19, No. 1, pp. 47-70, 2002.

[26] Gudeman, S., "Economic anthropology," Cheltenham, UK : Edward Elgar, 1998.

[27] Hall, H., "Borrowed theory : applying exchange theories in information science research," Library and Information Science Research, Vol. 25, No. 3, pp. 287-306, 2003.

[28] Harmon, R., Demirkan, H., Auseklis, N., and Reinoso, M., "From green computing to sustainable IT : Developing a sustainable service orientation," In System Sciences (HICSS), 43rd Hawaii International Conference on IEEE, pp. 1-10, 2010.

[29] Hilty, L., Lohmann, W., and Huang, E., "Sustainability and ICT-an overview of the field," Politeia, Vol. 27, No. 104, pp. 13-28, 2011.

[30] Homans, G. C., "Social behavior as exchange," American Journal of Sociology, pp. 597-606, 1958.

[31] Huang, D. L., Patrick Rau, P. L., Salvendy, G., Gao, F., and Zhou, J., "Factors affecting perception of information security and their impacts on IT adoption and security practices," International Journal of Human-Computer Studies, Vol. 69, No. 12, pp. 870-883, 2011.

[32] Jenkin, T. A., Webster, J., and McShane, L., "An agenda for 'Green'information technology and systems research," Information and Organization, Vol. 21, No. 1, pp. 17-40, 2011.

[33] Kelley, H. and Thibaut, J. W., "Interpersonal Relations : A Theory of Interdependence," New York : John Wiley-Interscience, 1978.

[34] Kim, S. and Park, S., "Influencing factors for compliance intention of information security policy," The Journal of Society for e-Business Studies, Vol. 16, No. 4, pp. 33-51, 2011.

[35] Kling, R., "Learning about information technologies and social change : The contribution of social informatics," The Information Society, Vol. 16, No. 3, pp. 217-232, 2000.

[36] Kwon, O. B., Wen, Y., and Kim, M. Y., "Factors affecting blog use : An empirical study using extended TAM and perceived encouragement," The Journal of Society for e-Business Studies, Vol. 12, No. 4, 165-182, 2007.

[37] Lallmahamood, M., "An Examination of Individual's Perceived Security and Privacy of the Internet in Malaysia and the Influence of this on their Intention to Use E-commerce : Using an Extension of the Technology Acceptance Model," Doctoral dissertation, Malaysian Institute of Management, 2007.

[38] Lee, E. M., Park, S. Y., and Lee, H. J., "Employee perception of CSR activities : Its antecedents and consequences," Journal of Business Research, Vol. 66, No. 10, pp. 1716-1724, 2013.

[39] Lee, M. K., Shi, N., Cheung, C. M., Lim, K. H., and Sia, C. L., "Consumer's decision to shop online : The moderating role of positive informational social influence," Information and Management, Vol. 48, No. 6, pp. 185-191, 2011.

[40] Legris, P., Ingham, J., and Collerette, P., "Why do people use information technology? A critical review of the technology acceptance model," Information and Management, Vol. 40, No. 3, pp. 191-204, 2003.

[41] Lev, B., Petrovits, C., and Radhakrishnan, S., "Is doing good good for you? How corporate charitable contributions enhance revenue growth," Strategic Management Journal, Vol. 31, No. 2, pp. 182-200, 2010.

[42] Lichtenstein, D. R., Drumwright, M. E., and Braig, B. M., "The effect of corporate social responsibility on customer donations to corporate-supported nonprofits," Journal of Marketing, Vol. 68, No. 4, pp. 16-32, 2004.

[43] Lin, C. S., Wu, S., and Tsai, R. J., "Integrating perceived playfulness into expectation-confirmation model for web portal context," Information and Management, Vol. 42, No. 5, pp. 683-693, 2005.

[44] Luo, X. and Bhattacharya, C. B., "Corporate social responsibility, customer satisfaction, and market value," Journal of Marketing, Vol. 70, No. 4, pp. 1-18, 2006.

[45] Ma, H. K., Chu, M. K., and Chan, W. W., "Construction of a teaching package on promoting prosocial Internet use and preventing antisocial Internet use," The Scientific World Journal, Vol. 11, pp. 2136-2146, 2011.

[46] Maignan, I. and Ferrell, O. C., "Antecedents and benefits of corporate citizenship : an investigation of French businesses," Journal of Business Research, Vol. 51, No. 1, pp. 37-51, 2001.

[47] Molla, A. and Abareshi, A., "Green IT Adoption : A Motivational Perspective," In PACIS, p. 137, 2011.

[48] Molla, A., Pittayachawan, S., Corbitt, B., and Deng, H., "An international comparison of Green IT diffusion," International Journal of e-Business Management, Vol. 3, No. 2, p. 3, 2009.

[49] Molm, L. D., "Coercive Power in Social Exchange," Cambridge University Press, 1997.

[50] Osterhus, T. L., "Pro-social consumer influence strategies : when and how do they work?," The Journal of Marketing, Vol. 61, No. 4, pp. 16-29, 1997.

[51] Penner, L. A., "Dispositional and organizational influences on sustained vol-

unteerism : An interactionist perspective," Journal of Social Issues, Vol. 58, No. 3, pp. 447-467, 2002.

[52] Penner, L. A., Dovidio, J. F., Piliavin, J. A., and Schroeder, D. A., "Prosocial behavior : Multilevel perspectives," Annual Review of Psychology, Vol. 56, pp. 365-392, 2005.

[53] Penner, L. A., Fritzsche, B. A., Craiger, J. P., and Freifeld, T. R., "Measuring the prosocial personality, Advances in Personality Assessment," Vol. 10, pp. 147-163, 1995.

[54] Pracejus, J. W. and Olsen, G. D., "The role of brand/cause fit in the effectiveness of cause-related marketing campaigns," Journal of Business Research, Vol. 57, No. 6, pp. 635-640, 2004.

[55] Rahman, N. and Akhter, S., "Incorporating sustainability into information technology management," International Journal of Technology Management and Sustainable Development, Vol. 9, No. 2, pp. 95-111, 2010.

[56] Rest, J. R., Bebeau, M. J., Narvez, D., and Thoma, S. J., "Postconventional Moral Thinking : A Neo-Kohlbergian Approach," Psychology Press, 1999.

[57] Roberts, J. A., "Will the real socially responsible consumer please step forward?," Business Horizons, Vol. 39, No. 1, pp. 79-83, 1996.

[58] Rosenhan, D. and White, G. M., "Observation and rehearsal as determinants of prosocial behavior," Journal of Personality and Social Psychology, Vol. 5, No. 4, p. 424, 1967.

[59] Salb, D., Friedman, H. H., and Friedman, L. W., "The Role of Information Technology in Fulfilling the Promise of Corporate Social Responsibility," Computer and Information Science, Vol. 4, No. 4, pp. 2-9, 2011.

[60] Sawyer, S. and Rosenbaum, H., "Social informatics in the information sciences : Current activities and emerging directions," Informing Science, Vol. 3, No. 2, pp. 89-89, 2000.

[61] Seider, S., Novick, S., and Gomez, J., "The effects of privileging moral or performance character development in urban adolescents," The Journal of Early Adolescence, Vol. 33, No. 6, pp. 786-820, 2013.

[62] Shiau, W. L. and Luo, M. M., "Factors affecting online group buying intention and satisfaction : A social exchange theory perspective," Computers in Human Behavior, Vol. 28, No. 6, pp. 2431-2444, 2012.

[63] Shih, H. P., "An empirical study on predicting user acceptance of e-shopping on the Web," Information and Management, Vol. 41, No. 3, pp. 351-368, 2004.

[64] Sinha, M., "Green information technology : a strategy to become socially responsible software organization," International Journal of Enterprise Compu-

ting And Business Systems, Vol. 1, No. 2, 2011.

[65] Suh, B., "The impact of perceived security control on the acceptance of internet banking," The Journal of Society for e-Business Studies, Vol. 11, No. 1, pp. 25-52, 2006.

[66] Thomson, M., MacInnis, D. J., and Park, C. W., "The ties that bind : measuring the strength of consumers' emotional attachments to brands," Journal of Consumer Psychology, Vol. 15, No. 1, pp. 77-91, 2005.

[67] Tseng, M. L., Tan, R. R., and Siriban-Manalang, A. B., "Sustainable consumption and production for Asia : sustainability through green design and practice," Journal of Cleaner Production, Vol. 40, pp. 1-5, 2013.

[68] Varadarajan, R. P., Menon, A., "Cause-related marketing : a coalignment of marketing strategy and corporate philanthropy," Journal of Marketing, Vol. 52, No. 3, pp. 58-74, 1988.

[69] Vatanasombut, B., Igbaria, M., Stylianou, A. C., and Rodgers, W., "Information systems continuance intention of web-based applications customers : The case of online banking," Information and Management, Vol. 45, No. 7, pp. 419-428, 2008.

[70] Von Ahn, L., Maurer, B., McMillen, C., Abraham, D., and Blum, M., "recaptcha : Human-based character recognition via web security measures," Science, Vol. 321, No. 5895, pp. 1465-1468, 2008.

[71] Wang, C. and Wang, C., "Helping others in online games : Prosocial behavior in Cyberspace," Cyber Psychology, Behavior, and Social Networking, Vol. 11, pp. 344-346, 2008.

[72] Watson, R. T., Boudreau, M. C., and Chen, A. J., "Information Systems and Environmentally Sustainable Development : Energy Informatics and New Directions for the IS Community," MIS Quarterly, Vol. 34, No. 1, 2010.

[73] Wilska, T. A., "Mobile phone use as part of young people's consumption styles," Journal of Consumer Policy, Vol. 26, No. 4, pp. 441-463, 2003.

[74] Winters, L. C., "Does it Pay to Advertise to Hostile Audiences with Corporate Advertising?," Journal of Advertising Research, Vol. 28, No. 3, p. 11, 1988.

[75] Wright, M. F. and Li, Y., "The associations between young adults' face-to-face prosocial behaviors and their online prosocial behaviors," Computers in Human Behavior, Vol. 27, No. 5, pp. 1959-1962, 2011.

[76] Yeow, P., Dean, A., and Tucker, D., "Bags for life : The embedding of ethical consumerism," Journal of Business Ethics, pp. 1-13, 2013.

〈Appendix A〉 Constructs

Constructs	Items	References	Factor	AVE	Composite
Perceived Social Responsibility	PSR1. I think the website embedding reCAPTCHA is socially responsible	Brown and Dacin [6], Lee et al. [38]	0.829	0.717	0.953
	PSR2. I think the website embedding reCAPTCHA is more concerned about society's welfare than other similar websites		0.839		
	PSR3. I think the website embedding reCAPTCHA is related to society		0.869		
	PSR4. I think the website embedding reCAPTCHA has a strong sense of social responsibility		0.832		
	PSR5. I think the website embedding reCAPTCHA goes beyond the mere preserving security role		0.867		
Perceived Security	SEC1. I think that my personal information is safe on this website embedding reCAPTCHA	Flavián and Guinalíu [22]	0.842	0.730	0.956
	SEC2. I think that this website has arranged systems to secure user information safety		0.859		
	SEC3. I think that the people behind this website embedding reCAPTCHA show great concern for information security		0.828		
	SEC4. I think that this website embedding reCAPTCHA has sufficient technical capacity to ensure that no other sites will supplant its identity on the internet		0.846		
	SEC5. When I send data to this web site, I am sure that they will not be intercepted by unauthorized third parties		0.854		
	SEC6. I think this website embedding reCAPTCHA has sufficient technical capacity to ensure that the data I send will not be intercepted by hackers		0.869		
	SEC7. When I send data to this website, I am sure they cannot be modified by a third party		0.862		
	SEC8. I think this website embedding reCAPTCHA has sufficient technical capacity to ensure that the data I send cannot be modified by a third party		0.874		

Constructs	Items	References	Factor	AVE	Composite
Perceived Ease of Use	EOU1. Using this website embedding reCAPTCHA is easy for me	Davis [14], Bhattacherjee [4], Lin et al. [43]	0.894	0.791	0.950
	EOU2. Learning to operate this website embedding reCAPTCHA is easy for me		0.899		
	EOU3. My interaction with this website embedding reCAPTCHA is clear and understandable		0.903		
	EOU4. It would be easy for me to become skillful at using this website embedding reCAPTCHA		0.899		
	EOU5. I can easily reinforce internet security by using this website embedding reCAPTCHA		0.850		
Perceived Personal Usefulness	PU1. Using the website embedding reCAPTCHA helps me to accomplish my web tasks	Davis [14], Bhattacherjee [4], Lin et al. [43]	0.907	0.815	0.957
	PU2. Adopting reCAPTCHA would be useful for my purposes		0.901		
	PU3. Using the website embedding reCAPTCHA would enhance my experience on the web		0.909		
	PU4. Using the website embedding reCAPTCHA would be more helpful than using a website without reCAPTCHA		0.893		
	PU5. Overall, I find reCAPTCHA to be useful for me		0.904		
Perceived Social Usefulness	SU1. I think the website embedding reCAPTCHA is performing a useful service to society by digitizing old text transcripts	Davis [14] (amended)	0.905	0.809	0.962
	SU2. I think the website embedding reCAPTCHA is generally useful to society via its digitization of distorted text materials		0.906		
	SU3. I think using the website embedding reCAPTCHA is more helpful for social development than other websites that don't include reCAPTCHA		0.915		
	SU4. I think the website embedding reCAPTCHA is supportive and solves social problems by its digitizing role of old texts		0.911		
	SU5. I think using the website embedding reCAPTCHA is useful for creating a better society than the current one		0.856		
	SU6. I think using the website embedding reCAPTCHA is helpful to solve social issues with high social costs such as converting old distorted text transcripts into electronic materials		0.901		

Constructs	Items	References	Factor	AVE	Composite
Intention to Use	INT1. I will suggest the use of reCAPTCHA to any website	Davis [14], Bhattacherjee [4], Lin et al. [43]	0.859	0.763	0.941
	INT2. I will use websites embedding reCAPTCHA		0.902		
	INT3. I am more willing to use websites embedding reCAPTCHA when I encounter them on the internet		0.859		
	INT4. I would prefer to use websites embedding reCAPTCHA over those with another security technology		0.878		
	INT5. I will recommend websites embedding reCAPTCHA to other people		0.868		
Pro-sociality	PROS1. My decisions are usually based on my concern for other people	Penner et al. [53], Penner et al. [51]	0.791	0.737	0.849
	PROS2. My decisions are usually based on what is the most fair and just way to act		0.753		
	PROS3. I choose alternatives that are intended to meet everybody's needs		0.831		
	PROS4. I choose a course of action that maximizes the help other people receive		0.840		
	PROS5. I choose a course of action that considers the rights of all people involved		0.852		
	PROS6. My decisions are usually based on concern for the welfare of others		0.840		

〈Appendix B〉 Correlation Matrix of Latent Variables

	EOU	INT	PROS	PSR	PU	SEC	SU
EOU	1	0	0	0	0	0	0
INT	0.736	1	0	0	0	0	0
PROS	0.4458	0.5159	1	0	0	0	0
PSR	0.6663	0.6637	0.4955	1	0	0	0
PU	0.8321	0.806	0.508	0.7055	1	0	0
SEC	0.732	0.6716	0.4573	0.6808	0.7505	1	0
SU	0.6253	0.6939	0.4444	0.7067	0.6791	0.5847	1

저 자 소 개

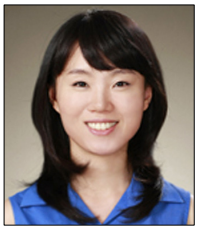

김선희 (E-mail : sunheekim@khu.ac.kr)

2001년	한동대학교 경영경제학과 (경영학사, 경제학사)
2003년	이화여자대학교 경영학과 (경영석사)
2003년~2005년	농협중앙회 여신부
2006년~2008년	SAS Korea 컨설팅사업부
2009년~2012년	신한은행 마케팅부
2013년	경희대학교 경영학과 박사과정 수료
2012년~현재	경희대학교 차세대정보기술연구센터 선임연구원
관심분야	빅데이터분석, 텍스트분석, 소셜미디어 분석 활용, 계량적 마케팅 및 브랜딩

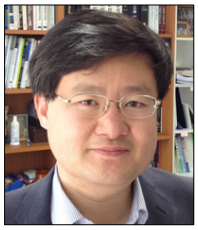

권오병 (E-mail : obkwon@khu.ac.kr)

1988년	서울대학교 경영학과 (경영학사)
1990년	한국과학기술원 경영과학과 (공학석사)
1995년	한국과학기술원 경영과학과 (공학박사)
2001년~2002년	카네기멜론대학 전산학부 방문연구원
2009년~2011년	샌디에고주립대학 경영정보학과 방문교수
2004년~현재	경희대학교 경영대학 교수
관심분야	빅데이터분석, 사물인터넷, 소셜미디어, 유비쿼터스 컴퓨팅