Low Temperature Methane Steam Reforming for Hydrogen Production for Fuel Cells

Hyun-Seog Roh* and Ki-Won Jun†,*

Department of Environmental Engineering, Yonsei University, Wonju, Gangwon 220-710, Korea
**E-mail: hsroh@yonsei.ac.kr*
*†Alternative Chemicals/Fuel Research Center, Korea Research Institute of Chemical Technology (KRICT), P.O. Box 107, Yuseong, Daejeon 305-600, Korea. *E-mail: kwjun@krict.re.kr*
Received July 4, 2008, Accepted November 20, 2008

Low temperature methane steam reforming to produce H_2 for fuel cells has been calculated thermodynamically considering both heat loss of the reformer and unreacted H_2 in fuel cell stack. According to the thermodynamic equilibrium analysis, it is possible to operate methane steam reforming at low temperatures. A scheme for the low temperature methane steam reforming to produce H_2 for fuel cells by burning both unconverted CH_4 and H_2 to supply the heat for steam methane reforming has been proposed. The calculated value of the heat balance temperature is strongly dependent upon the amount of unreacted H_2 and heat loss of the reformer. If unreacted H_2 increases, less methane is required because unreacted H_2 can be burned to supply the heat. As a consequence, it is suitable to increase the reaction temperature for getting higher CH_4 conversion and more H_2 for fuel cell stack. If heat loss increases from the reformer, it is necessary to supply more heat for the endothermic methane steam reforming reaction from burning unconverted CH_4, resulting in decreasing the reforming temperature. Experimentally, it has been confirmed that low temperature methane steam reforming is possible with stable activity.

Key Words: Low temperature, Hydrogen production, Methane steam reforming, Fuel cells

Introduction

Fuel cells (FC) can directly convert chemical energy of a fuel into electricity by the electrochemical reaction between the fuel and air.[1] The efficiency of FC can be 100% theoretically. In addition, they are environmentally clean processes.[2] Various types of fuel cells are available for specific applications with a wide range of electrical power output, ranging from less than 1 kW up to several MW.[3]

The most usual fuel for FC is hydrogen. H_2 is commercially produced from fossil fuels.[4] Especially, methane is the favorable source to produce H_2. For example, hydrogen can be produced from steam reforming of methane (SRM), catalytic partial oxidation of methane (POM), CO_2 reforming of methane (CDR), oxy-steam reforming of methane (OSRM), and combined H_2O and CO_2 reforming of methane (CSCRM) over nickel and precious metal catalysts.[5-29] Among the various types of reforming reactions, SRM is well established process to produce H_2 for FC.[4,5] However, SRM is a highly energy intensive process due to its high endothermicity. Thus, high temperature is favorable for SRM because methane is thermodynamically very stable molecule with a high C-H bond dissociation energy of 104 kcal/mol.[30] Consequently, special alloy materials (Inconel or Incolloy) with high thermal stability are employed as tube materials even though they are very expensive. In addition, the reforming catalyst can deactivate with time on stream due to sintering at high temperatures.[4-6] Thus, it is necessary to develop low temperature process to decrease the material cost for the reformer tube. Moreover, if the low temperature process is possible, the lifetime of the reformer tube will be extended considerably.

Previously, we have reported that it is possible to operate SRM at 548°C by burning unconverted CH_4 to supply the energy for SRM.[17] At that time, it has been assumed that 100% H_2 utilization in the fuel cell stack and 100% heat efficiency without heat loss from the reformer. In the present study, low temperature methane steam reforming has been examined by thermodynamic calculation considering unconverted H_2 in the fuel cell stack and heat loss from the reformer, which is close to the real situation to produce H_2 for FC at low temperatures.

Experimental

Heat balance temperature is defined as the temperature, at which the heat required for the endothermic methane steam reforming is equal to the heat obtained from burning unconverted CH_4 and H_2. Calculation basis is as follows. First, two kinds of required heat are considered. One is the heat which is used to generate steam and to pre-heat the reactants (CH_4 and H_2O) to the reaction temperature. The other is the reaction heat for methane steam reforming reaction ($CH_4 + H_2O = 3H_2 + CO$, ΔH = 206 kJ/mol). Second, the heat is generated from burning unconverted CH_4 ($CH_4 + 2O_2 = CO_2 + 2H_2O$, ΔH = -803 kJ/mol) and H_2 ($H_2 + 0.5O_2 = H_2O$, ΔH = -242 kJ/mol). Initial temperature is assumed to be 25°C.

Heat loss of the reformer is defined as the waste heat emitted to ambient from the reformer. In actual case, the waste heat is present even though insulation is employed to decrease the heat loss of the reformer.

To evaluate low temperature methane steam reforming to produce H_2 for FC, thermodynamic equilibrium was calculated by using HSC Chemistry (Ver. 3.0, Outokumpu Research Oy, Finland). The reactant steam/methane ratio was fixed at 3, which is the typical operating conditions for SRM.

The support material used in this study was prepared as

follows. A solution of mixed Ce-acetate/Zr-nitrate (CeO_2/ZrO_2 = 0.25w/w) was impregnated on γ-Al_2O_3 (CONDEA Chemie GmbH) at room temperature for 12 h. The precoated sample was pre-calcined at 900°C for 6 h with a heating rate of 1°C/min. During the heat treatment, γ-Al_2O_3 was transferred to θ-Al_2O_3. Nickel was loaded by impregnating an appropriate amount of $Ni(NO_3)_2 \cdot 6H_2O$ on the support for 24 h. The as-synthesized catalyst was calcined in air at 550°C for 6 h. The nickel loading was 12 wt.%.

Low temperature methane steam reforming reaction was carried out at atmospheric pressure in a fixed-bed reactor system. The reactor (Incolloy 800H) with an inner diameter of 18 mm was heated in an electric furnace. The bed temperature was monitored by a K-type thermocouple placed in the center of the catalyst bed with a thermowell. The feed was a mixture of CH_4 and H_2O. Gaseous reactants were controlled and monitored by mass flow controller. Water was fed using a HPLC pump (F6100, FUTECS) and a specially designed evaporator. Before reaction, two grams of catalyst with a particle size of 16-20 mesh were loaded and reduced at 700°C for 3 h with 5% H_2 in N_2. The catalytic reactions were carried out at different temperatures and gas hourly space velocities. A cold trap at the outlet of the reactor was used to condense any water from the product gas stream. The effluent gases were analyzed by an on-line GC equipped with a TC detector, using a Carbosphere packed column (Alltech) and Ar as a carrier gas.

Results and Discussion

Table 1 summarizes the equilibrium CH_4 conversion with the reaction temperature at 1 atm. CH_4 conversion increases almost linearly with increasing temperature at this temperature range. CH_4 conversion is too low at 400°C, while it is considerable above 500°C. It means that if the steam reforming catalyst is stable above 500°C, low temperature methane steam reforming is possible for FC.

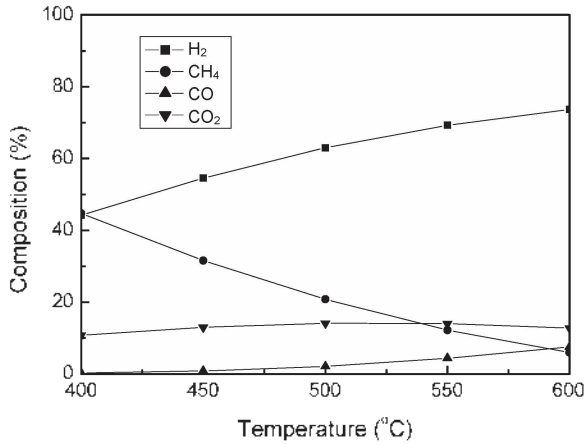

Figure 1. Product gas composition (dry basis) with reaction temperature.

Table 1. Equilibrium CH_4 conversion with temperature

Temp. (°C)	400	450	500	550	600
CH_4 conv. (%)	19.9	30.5	43.9	60.1	77.2

(Conditions: P = 1 atm, H_2O/CH_4 = 3)

Figure 1 shows the dry basis product gas composition with reaction temperature. It is worthy to note that H_2 content in dry gas increases almost linearly with increasing temperature from 400 to 600°C. On the contrary, CH_4 content in dry gas decreases dramatically with increasing temperature. Regarding CO_2 content, it increases slowly from 11% at 400°C to 14% at 550°C, then it decreases to 13% at 600°C. This is due to the fact that CH_4 conversion increases with increasing temperature and the water gas shift reaction (WGS: $CO + H_2O = CO_2 + H_2$) is less favorable at higher temperatures. In the case of CO content in dry basis, it is almost negligible at 400°C due to WGS, while it is considerable at 600°C (7.5% CO). Thus, it has been confirmed that low temperature methane steam reforming can effectively decrease CO content, which is a poison in polymer electrolyte membrane fuel cells (PEMFC). This can be additional advantage for low temperature methane steam reforming to produce H_2 for FC.

According to the thermodynamic analysis results, SRM is feasible above 500°C with considerable H_2 content in the effluent gases in dry gas basis. In addition, there is still a certain amount of unconverted CH_4, which can be burned to supply the heat for the reformer, when SRM is operated at low temperatures. To improve the total efficiency of the reforming section, low temperature methane steam reforming to produce hydrogen for FC has been proposed based on burning both unconverted CH_4 and unconverted H_2 to supply the energy for steam generation, reactant preheating and the endothermic SRM reaction (Figure 2). In Figure 2, steam is generated in the steam generator. The reactant gases are pre-heated from 25°C to the reaction temperature in the pre-heater. At the reformer, low temperature methane steam reforming reaction is carried out at the desired temperature. After SRM is done, CO in the product gas is removed because CO is a poison in PEMFC. Then, CO_2 is removed and water is condensed. Finally, H_2 produced from SRM and unconvered CH_4 are introduced to the fuel cell stack. After water is condensed, both unconverted CH_4 and unconverted H_2 are burned in steam generator, pre-heater, and reformer to supply the energy to each unit.

It is calculated that heat balance can be achieved at a certain temperature under the following assumptions: (1) heat is generated from burning both unconverted CH_4 and unconverted

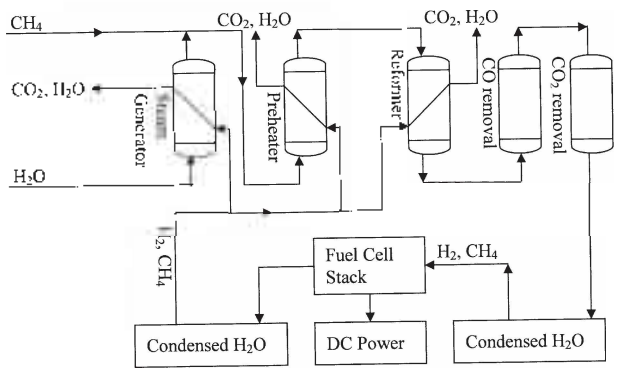

Figure 2. Schematic diagram of low temperature hydrogen production for fuel cells.

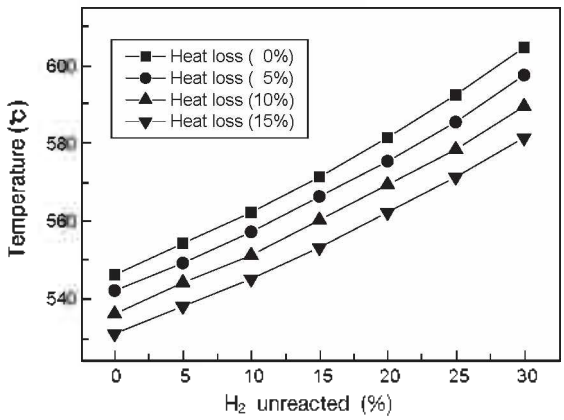

Figure 3. Balance temperature vs. unreacted H_2 for low temperature hydrogen production for fuel cells.

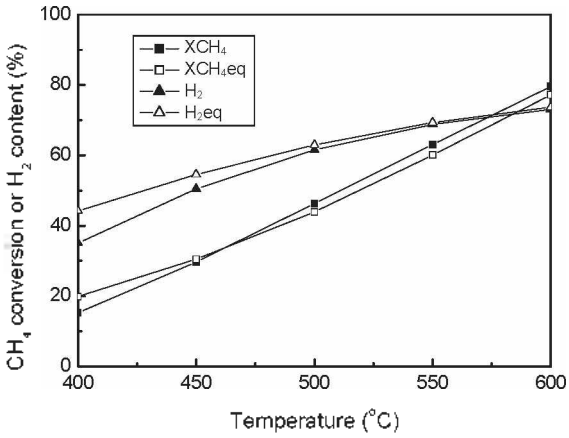

Figure 4. Comparison of experimental values with equilibrium values (Solid symbols: experimental values; Hollow symbols: equilibrium values; Experimental conditions: GHSV = 20,000 ml/g_{cat}·h).

H_2 under the equilibrium conditions; (2) heat is consumed for steam generation, preheating the feed to the desired temperature, and providing the endothermic reaction heat of SRM (206kJ/mol); (3) the initial temperature is taken as 25°C at atmospheric pressure. Heat loss from the reformer and H_2 utilization in the fuel cell stack are also considered to get the balance temperature for low temperature methane steam reforming to produce H_2 for FC.

Figure 3 shows the balance temperature with unreacted H_2 and heat loss from the reformer. It is obvious that the heat balance temperature is strongly dependent upon both unreacted H_2 in the fuel cell stack and heat loss from the reformer. If unreacted H_2 in the fuel cell stack increases, the heat for the reforming section can be generated from burning unreacted H_2. As a result, less methane is required to supply the heat for the reforming section. In another word, it is suitable to increase the reaction temperature to get higher CH_4 conversion to produce more H_2 for fuel cell stack. If heat loss increases from the reformer, it is necessary to supply more heat for the endothermic methane steam reforming reaction from burning unconverted CH_4, resulting in decreasing the reaction temperature.

It has been reported that Ni/Ce-ZrO_2/θ-Al_2O_3 was active and stable in methane reforming reactions.[9,10] Thus, the catalyst was employed at low temperature methane steam reforming to produce H_2 for FC. Figure 4 shows the comparison results between experimental values and equilibrium values of SRM over Ni/Ce-ZrO_2/θ-Al_2O_3 at different temperatures. Experimental values are close to thermodynamic equilibrium values under all the temperature ranges from 400 to 600°C. It suggests that the Ni/Ce-ZrO_2/θ-Al_2O_3 catalyst is very active at low temperature methane steam reforming to produce H_2 for FC. Thus, it has been confirmed that low temperature methane steam reforming is experimentally possible over the Ni/Ce- ZrO_2/θ-Al_2O_3 catalyst. By the way, CH_4 conversion of the catalyst increased linearly with increasing reaction temperature from 400 to 600°C because SRM is thermodynamically favorable at higher temperature. H_2 content also increased with increasing reaction temperature from 400 to 550°C and it lined out to 74% at 600°C. This is due to the fact that SRM is favorable at higher temperature but WGS is favorable at lower temperature. With increasing reaction temperature, more hydrogen is generated from SRM but it compensate H_2 consumption from reverse water gas shift reaction (RWGS: $H_2 + CO_2 = H_2O + CO$).

Conclusion

Thermodynamically, low temperature methane steam reforming is possible to produce H_2 for FC. The heat for the endothermic steam methane reforming reaction can be supplied by burning both unconverted CH_4 and H_2. The calculated value of the heat balance temperature is strongly dependent upon unreacted H_2 and heat loss of the reformer. The more unreacted H_2 in the fuel cell stack, the higher the reforming temperature. The more heat loss from the reformer, the less the reforming temperature. Experimentally, low temperature methane steam reforming is also possible over the Ni/Ce-ZrO_2/θ-Al_2O_3 catalyst.

Acknowledgments. This work was conducted as a subject (KK-0803-D0) of KRICT research program "Sustainable Chemical Technology" and also supported in part by Yonsei University Research Fund of 2008.

References

1. Yamamoto, O. *Electrochimica Acta* 2000, *45*, 2423.
2. Carrette, L.; Friedrich, K. A.; Stimming, U. *Fuel Cells* **2001**, *1*, 5.
3. Ashcroft, A. T.; Cheetham, A. K.; Foord, J. S.; Green, M. L. H.; Grey, C. P.; Murrell, A. J.; Vernon, P. D. F. *Nature* **1990**, *344*, 319.
4. Rostrup-Nielsen, J. R. In *Catalysis Science and Technology*; Anderson, J. R.; Boudart, M., Eds.; Springer: Berlin, 1984; Vol. 5, p 91.
5. Peña, M. A.; Gomez, J. P.; Fierro, J. L. G. *Appl. Catal. A* **1996**, *144*, 7.
6. Bradford, M. C. J.; Vannice, M. A. *Catal. Rev.-Sci. Eng.* **1999**, *41*, 1.
7. Jun, K.-W.; Roh, H.-S.; Chary, K. V. R. *Catal. Surv. Asia* **2007**, *11*, 97.
8. Jeong, J. H.; Lee, J. W.; Seo, D. J.; Seo, Y. T.; Yoon, W. L.; Lee, D. K.; Kim, D. H. *Appl. Catal. A* **2006**, *302*, 151.
9. Lee, D. K.; Baek, I. H.; Yoon, W. L. *Int. J. Hydrogen Energy*

2006, *31*, 649.
10. Chin, Y.-H.; King, D. L.; Roh, H.-S.; Wang, Y.; Heald, S. M. *J. Catal.* **2006**, *244*, 153.
11. Roh, H.-S.; Potdar, H. S.; Jun, K.-W.; Kim, J.-W.; Oh, Y.-S. *Appl. Catal. A* **2004**, *276*, 231.
12. Roh, H.-S.; Potdar, H. S.; Jun, K.-W. *Catal. Today* **2004**, *93-95*, 39.
13. Oh, Y.-S.; Roh, H.-S.; Jun, K.-W.; Baek, Y.-S. *Int. J. Hydrogen Energy* **2003**, *28*, 1387.
14. Roh, H.-S.; Jun, K.-W.; Park, S.-E. *Appl. Catal. A* **2003**, *251*, 275.
15. Potdar, H. S.; Roh, H.-S.; Jun, K.-W.; Ji, M.; Liu, Z.-W. *Catal. Lett.* **2002**, *84*, 95.
16. Liu, Z.-W.; Jun, K.-W.; Roh, H.-S.; Baek, S.-C.; Park, S.-E.; Song, T.-Y. *J. Mol. Catal. A* **2002**, *189*, 283.
17. Liu, Z.-W.; Jun, K.-W.; Roh, H.-S.; Park, S.-E. *J. Power Sources* **2002**, *111*, 283.
18. Roh, H.-S.; Jun, K.-W.; Baek, S.-C.; Park, S.-E. *Bull. Korean Chem. Soc.* **2002**, *23*, 1166.
19. Roh, H.-S.; Jun, K.-W.; Baek, S.-C.; Park, S.-E. *Catal. Lett.* **2002**, *81*, 147.
20. Roh, H.-S.; Koo, K. Y.; Jeong, J. H.; Seo, Y. T.; Seo, D. J.; Seo, Y.-S.; Yoon, W. L.; Park, S. B. *Catal. Lett.* **2007**, *117*, 85.
21. Koo, K. Y.; Roh, H.-S.; Seo, Y. T.; Seo, D. J.; Yoon, W. L.; Park, S. B. *Appl. Catal. A* **2008**, *340*, 183.
22. Koo, K. Y.; Roh, H.-S.; Seo, Y. T.; Seo, D. J.; Yoon, W. L.; Park, S. B. *Int. J. Hydrogen Energy* **2008**, *33*, 2036.
23. Roh, H.-S.; Jun, K.-W.; Baek, S.-C.; Park, S.-E. *Bull. Korean Chem. Soc.* **2002**, *23*, 799.
24. Roh, H.-S.; Jun, K.-W.; Baek, S.-C.; Park, S.-E. *Bull. Korean Chem. Soc.* **2002**, *23*, 793.
25. Roh, H.-S.; Dong, W.-S.; Jun, K.-W.; Liu, Z.-W.; Park, S.-E.; Oh, Y.-S. *Bull. Korean Chem. Soc.* **2002**, *23*, 669.
26. Roh, H.-S.; Jun, K.-W.; Dong, W.-S.; Chang, J.-S.; Park, S.-E.; Joe, Y.-I. *J. Mol. Catal. A* **2002**, *181*, 137.
27. Dong, W.-S.; Roh, H.-S.; Jun, K.-W.; Park, S.-E.; Oh, Y.-S. *Appl. Catal. A* **2002**, *226*, 63.
28. Dong, W.-S.; Roh, H.-S.; Liu, Z.-W.; Jun, K.-W.; Park, S.-E. *Bull. Korean Chem. Soc.* **2001**, *22*, 1323.
29. Roh, H.-S.; Jun, K.-W.; Dong, W.-S.; Park, S.-E.; Baek, Y.-S. *Catal. Lett.* **2001**, *74*, 31.
30. Choudhary, T. V.; Goodman, D. W. *J. Mol. Catal. A* **2000**, *163*, 9.