J Korean Soc Ther Radiol: Vol. 8, No. 2, December, 1990

Design and Thermal Distribution of Microwave Spiral Antenna

Kyung Ja Lee, M.D.

Department of Radiology, College of Medicine, Ewha Womans University, seoul, Korea

Spiral microwave antennas have been developed and measured the thermal distribution in agar phantom.

The design has been configured in three types, 3 cm ϕ applicator with 24.5 cm length (A type), 4 cm ϕ with 12.2 cm (B type) and 6 cm ϕ with 24.5 cm length (C type).

The relative specific absorption rate (SAR) measured in phantom have been used to estimate the depth and profile of effective heating.

The applicator of copper antenna with 4 cm ϕ diameter and 12.2 cm length (B type) has the most homogeneous (FWHM=3.5 cm) and heating into deep site (D_{eff}=4 cm).

Key Words: Hyperthermia, Spiral antenna, Microwave

INTRODUCTION

The use of hyperthermia in the treatment of superficial malignancies had been demonstrated to be efficacious, and lymph node metastases from malignant melanoma and adenocarcionma of the breast can benefit from combinations of radiation and hyperthermia therapy[1)].

Techniques and equipment required to produce local regional superficial hyperthermia depend on the anatomic location and the physical extent of disease[2)]. The microwave heating modality is considered appropriate for lesions lying within 2~3 cm depth from surface.

We had designed and fabricated microwave hyperthermia device reformed with thermocouples controlled personal computer.

Treating the localized superficial tumors combined radiation and microwave hyperthermia device, we felt to need the applicators with good quality and then designed the spiral antennas and estimated with depth and profiles of effective heating.

The microwave heating device, still prevalent in the hyperthermia clinic, utilizes basic waveguide, wavecavity, and horn type antennas[3)]. In most instances, the devices radiate a linearly polarized electromagnetic field and are designed to couple into tissue via a small air gap or a direct contact coupling medium such as deionized water.

The electromagnetic field distribution depends on applicator design but generally has a maximum field intensity at the surface and in the center of the applicator, rapidly falling off in intensity with both depth into tissue and lateral distance from the aperture center. There are considerable variations in the absorption and thermal properties of tissue, as well as blood flow rates[4)].

In most case, electromagnetic field distributions associated with the single radiation aperture devices are specially large with respect to such tissue heterogeneity.

Therfore, treatment temperature distribution are not very uniform. As a consequence, the overall power delivered from a single antenna applicator may be limited by excessive temperature in a small subregion of the total treament field. This is particularly problematic since the distribution of absorbed energy that is necessary for effectively heating areas is usually much smaller than the physical dimension of the aperture area.

It is often difficult to place these large bulky devices in an appropriate position to effectively couple to and heat the clinically defined target volume.

To overcome the shortcomings of the single antenna applicators, the various types of microwave spiral antennas were designed and integrated into applicators of various configurations suitable for clinical use.

This work describes the applicators with respect to design and the thermal depth and profiles to achieving therapeutic gain.

METHOD AND MATERIALS

1. Microwave Spiral Antenna

Microwave antenna designs were originally based on dimensions appropriated for free space and subsequently modified empirically to obtain good performance with radiating into a lossy dielectric medium. The dimension of microwave antennas to be optimum condition should be same as microwave length or twice of its.

$L=n\lambda=n=12.24\,n(\mathrm{cm})$

$n=1/4,\ 1/2,\ 1,2,3,4,\cdots$

L is the length of antenna and λ is microwave length.

Three microwave spiral antennas were designed to be optimized and integrated into clinical hyperthermia applicators (Fig. 1). One (type A) is a 3 cm ϕ diameter, 24.5 cm long single arm two fold spiral with a copper conductor, the antenna operates of 2450 MHz and conducts with coaxial cable (Fig. 1A).

The second antenna (type B) is a 3 mm thickness copper spiral conductor with a diameter 4 cm ϕ and length to 12.2 cm (same as wavelength) (Fig. 1B).

The third antenna (type C) is also a copper spiral conductor with a diameter 6 cm ϕ and the length is 24.5 cm (2λ) (Fig. 1C).

The microwave antennas are driven through a 50 ohm coaxial transmission cables with outer conductor connected to the stainless stell cones

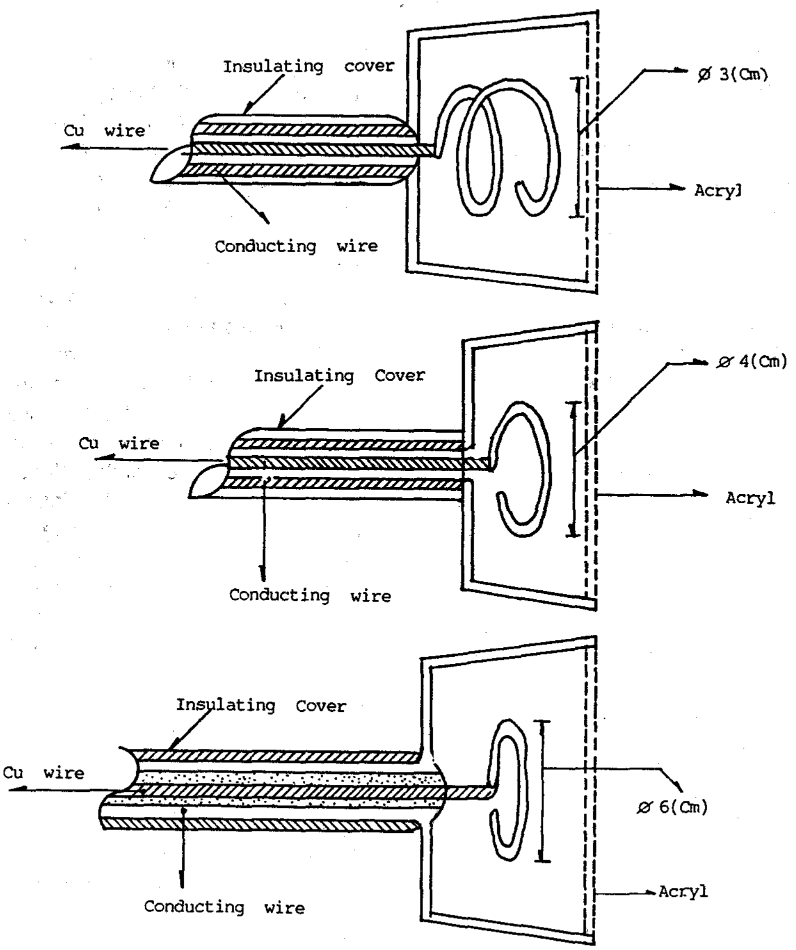

Fig. 1. Block diagram of the microwave spiral antennas,
A: 3 cm ϕ, 24.5 cm lenth B: 4 cm ϕ, 12.2 cm length C: 6 cm ϕ, 24.5 cm length

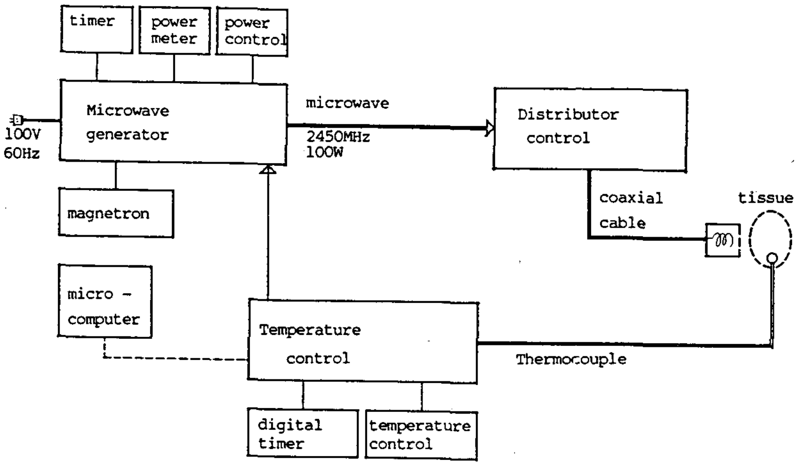

Fig. 2. Block diagram of the microwave hyperthermia device.

and the central feed line connected to the origin of the spiral pattern.

2. Thermometry

Thermal distribution were measured with copper constantin thermocouples and thermosensitive liquid crystal plates.

The microwave generator is reconstructed from commercial microwave oven which drived 2450 MHz continuous microwave power source to 100 watt and temperature controlled with personal computer. Power fed to each antenna was tuned with double stub tuner for optimum impedance match to the generator (Fig. 2). The hyperthermia phantom was prepared to be electric equilibrium with tissue, using water (100%), agar powder as gelling agent (4%), NaCl as conductive material (0.2%) and NaN_3 for an antiseptics (0.1%).

The hyperthermia phantom become stiff to be mixed by boiling togather inside a container box measuring 20×20×10 cm^3. Into the gelled hyperthermia phantom, catheters with thermocouples were inserted parallel to phantom surface away from the applicator axis for measuring the temperature. The applicator were located on the surface of agar phantom and the microwave power was contolled to be elevated the temperature in the phantom approximately 40~43℃ in 5 minutes varied between 20~50 watt.

Thermal distribution were measured by moving the sensor probe 0.5 cm and repeating the heat trial after cool down of the phantom to initial conditions. Thus multiple five minutes heat trials were

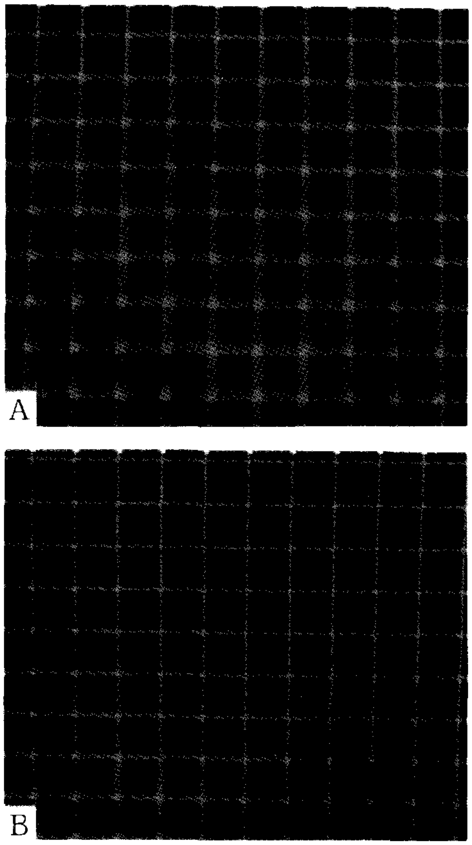

Fig. 3. Color response of thermal distribution with thermography,
a) axial plane, b) sagittal plane.

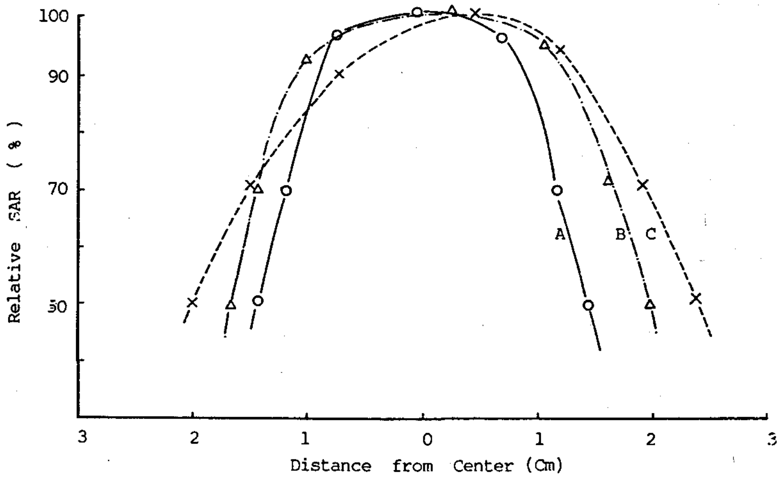

Fig. 4. Radial thermal profiles of spiral antenna in the phantom.

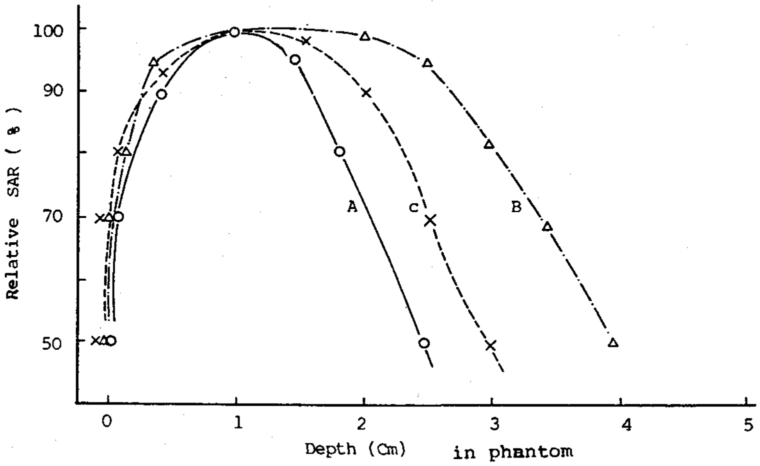

Fig. 5. The thermal depth measured in the agar phantom for the three types spiral antenna, A, B, C in A,B,C type of antenna.

performed the power deposition profile of each antenna configuration with the specific absorption rate. Another methods to measure the thermal distribution were using the thermographic plate with liquid crystal, the phantom heated with applicator could be split into two or more sections to allow measurements of heating patterns utilizing a thermographic plate (Fig. 3).

RESULTS

Temperature and heating pattern produced by microwave spiral antennas placed on surface of tissue equivalent agar phantom is measured by thermocouples and thermography. The SAR (specific absorption rate) value can be calculated for each measuring point from the recorded temperature and time data during the phantom experiments.

The SAR is given by $SAR = C\triangle T/\triangle t$, where C is the specific heat of the phantom and $\triangle T$ is the temperature rise during the time interval $\triangle t$. The time interval is selected as the initial 20 sec. of the heating.

In Fig. 4 the relative SAR profiles are shown for the phantom experiments, and the full width half maximum (FWHM) of Type A,B,C, are 2,3.5,3.4, cm resepetively.The A type and B type applicator have relative SAR profiles with near azimuthal symmetry in agar phantom but the C type applicator has lost thermal symmetry in profile. The thermal depths in agar phantom according to applicator types are shown in Fig. 5. The effective thermal depth (D_{eff}= $Tm/T_0 = e^{-2}$) due to applicator types A,B,C are 2.5, 3,4 cm from the phantom surface respectivley.

The axial and sagittal thermal distribution of three types applicator as shown in Fig. 6~8. The A type applicator, 3 cm φ diameter, two fold spiral applicator with 24 cm (2 λ) length has homogeneous and symmetric thermal distribution in a plane perpendicular to the central axis but the thermal depth are 2.5 cm (Fig. 6)

The C type applicator, 6 cm φ diameter spiral applicator with 24 cm (2λ) has inhomogeneous thermal distributions in perpendicular plane to the central axis and take hot spot on the antenna tip region (Fig. 7).

The B type applicator, 4 cm φ diameter spiral copper antenna with 12.2 cm (λ) length has the most homogeneous thermal distribution and heated deeper portion in the phantom (Fig. 8).

DISCUSSION

Over the past several years there has been considerable interest in potentiating the effects radiation on malignant tumor with the use of heat. It has been reported in various laboratory studies as well as clinical studies that heat alone can destory malignant tumors[5~9].

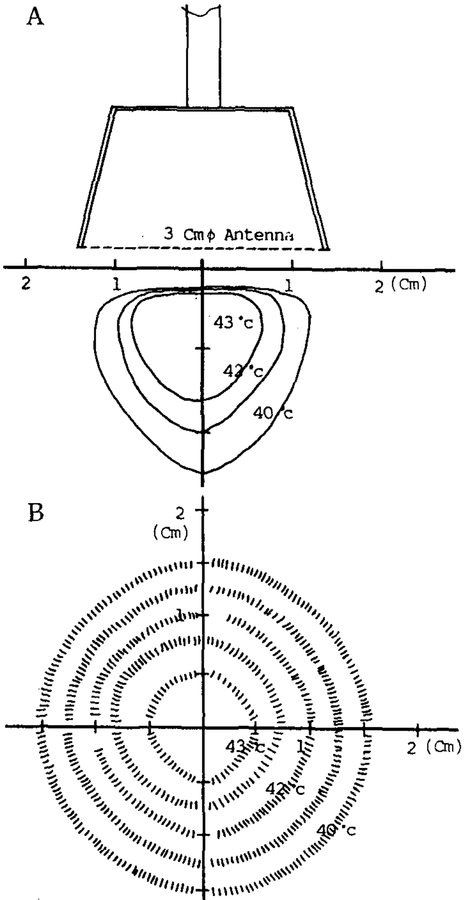

Fig. 6. Temperature profiles using the spiral applicator type A in plane of perpendicular (A) and parallel (B) to the central axis.

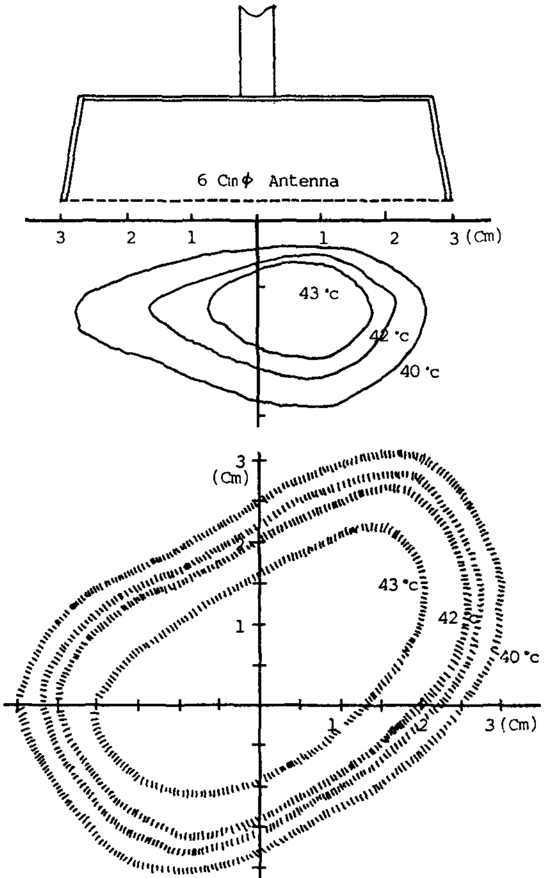

Fig. 7. Temperature profiles using the spiral applicator type C in plane of perpendicular (A) and parallel (B) to the central axis.

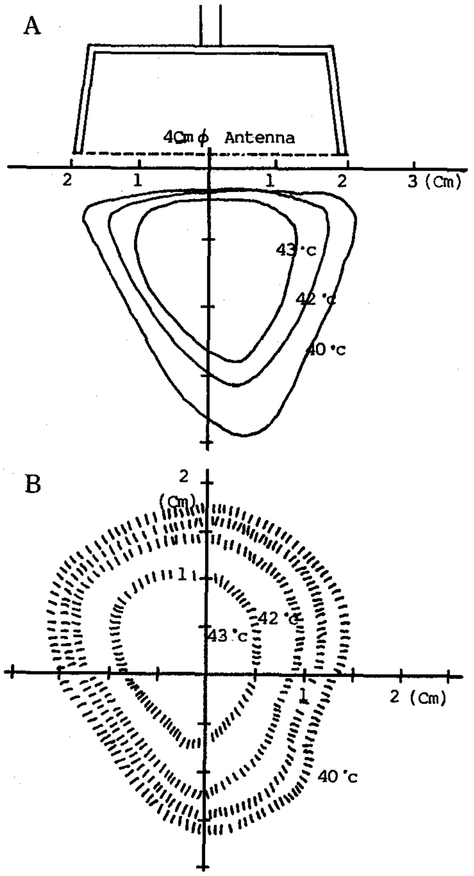

Fig. 8. Temperature profiles using the spiral applicator type B in plane of perpendicular (A) and parallel (B) to the central axis.

The use of adjuvant hyperthermia in the treatment of superficial malignancies has been demonstrated to be efficacious in a number of clinical studies[10]. In particular, a significant number of patient with superficial cutanenous, and lymph node metastasis from malignant melanoma and adenocarcinima of the breast can benefit from combination of radiation and hyperthermia[1]. Techniques and equipment required to produce locoregional superficial hyperthermia depend on the anatomic location and the physical extent of disease.

Radiobiological and clinical evidence that hyperthermia combined with ionizing radiation produces a significant improvement in therapeutic ratio attracted considerable interest[11~16]. Reasons for the use of hyperthermia in the treatment of cancer are (1) moderate hyperthermia (41~44℃) produces direct thermal effects, and also potentiates ionizing radiation damage by inhibition of repair and recovery of sublethal and potentially lethal damage[12,15,17,18] (2) cells in "S" phase are usually radio-resistant but sensitive to heat[13,19], (3) radioresistent hypoxic cells[20] are at least as sensitive to heat as oxygenated cells[21] (4) cells in lower pH enviornment, as in necrotic tissue, are sensitive to heat[22], (5) nutritionally deprived cells are especially heat senstive[23] (6) selective retention of heat by tumor vs, normal tissue[24].

The treatment of cancer with heat alone or invarious combination with ionizing radiation dates back many years. In 1866, a German physician[25] reported a two-year disapperance of facial sarcoma in a patient who had developed a high fever secondary to two episodes of erysipelas. Twenty-seven years later, Coley[26] described 38 patients with advanced cancer who had high fever secondary to erysipelas baterial toxins.

In 1909, deKeating-Hart[27] used a combination of heat produce by high frequency electrical currents and ionizing radiation for the treatment of cancer. These combined modalities have been used in the treatment of cancer in humans and laboratory animal over the past seven decades.

There are several methods for the induction of hyperthermia heat can be adapted to various clinical needs: ultrasound, radiofrequency, microwaved, and heated perfusion solutions. Ultrasound is early generated, focused, and localized, but air-fluid and bone interfaces can limit its application. Radiofrequency heating occurs at lower frequencies than microwaves and may require multiple electrodes.

Microwave radiation provides convinient and readily controlled local heating with relative simplicity.

Gessle, McCarty, and Parkinson[28] appear to be the first group that used microwave frequencies in the experimental treatment of cancer. Fiver years later, Allen[29] cured Crocker sarcoma-39 in rats by exposing the animal to radiation and 2450 MHz microwave for 10 to 20 minutes.

The microwave (MW) heating modality is considered appropriated for lesion lying within 2~3 cm depth from the surface. Thus, the current clinical experience is predominantly with external MW heating devices. The first generation of MW heating eqipment, still prevalent in the hyperthermic clinic, utilizes basic wave guide, wave cavity, and horn type antenna[3].

In most instances, the devices radiate or linearly polarized electro-magnetic (EM) field and are designed to couple into tissue via a small air gap or a direct contact coupling medium (bolus) such as deionized water.

One major drawback associated with such heating devices is that they have a fixed spatial EM field distribution across the applicator aperture.

REFERENCES

1. **Kapp DS:** Site and disease selection for hyperthermia clinical trials. Int J Hyperther 2:139-156, 1986
2. **Bagshaw MA, Taylor MA, Kapp DS:** Anatomic site-specitic modalities for hyperthermia. Cancer Res 44 (Supp): 482s-485s, 1984
3. **Kantor, G:** Evaluation and survey of microwave and radiofrequency applicator. J Microwave Power 16(2):135-150, 1981
4. **Samulski TV, Fessenden P, Lee ER:** Spiral microstrip hyperthermia applicators: Technical design and clinical performance. Int J Radiat Oncol Biol Phys 18:233-242, 1990
5. **Cavaliere R, Ciocatto EC, Giovauella BC:** Selective heat sensitivity of cancer cells. Cancer 20:1351, 1967
6. **Crile G:** Selective destruction of cancers after exposure to heat. Ann Surg 136:404-407, 1962
7. **Dickson JA, Muckle DS:** Total-body hyperthermia versusprimary tumor hyperthermia in the treatment of the rabbit VX-2 carcinoma. Cancer Res 32:1916-1923, 1972
8. **Harisiadis L, Hall EJ, Kraijevic PTA:** Hyperthermia: Biological studies at the cellular level. Radiology 117:447-452, 1975
9. **Lambert RA:** Demonstration of the greater sensitivity to heat of sarcoma cells as compared with actively proliferating connective tissue cells. JAMA 59:2147-2148, 1912
10. **Overgaard J:** Rationale and problems in the disign of clinical studies. In: Overgaard J. ed. Hyperthermic oncology, Vol. 2. London: Taylor and Francis: 325-338, 1985
11. **Belli JA, Bante FJ:** Influence of temperature on the radiation response of mammalian cells in tissue cultures. Radiat Res 18:272-276, 1963
12. **Ben-Hurr E, Elkin MM:** Thermally enhances radioresponse of cultured Chines hamster cells; Inhibition of sublethal damage and enhancement of lethal damage. Radiat Res 58:38-51, 1974
13. **Dewey WC, Hopwood LE, Sapareto SA:** Cellular response to combinations of hyperthermia and radiation. Radiology 123:463-474, 1977
14. **Gerner EW, Conner WG, Boone MLM:** The potential of localized heating as an adjunct to radiation therapy. Radiology 116:433-439, 1975
15. **Hahn EW, Alfeiri AA, Kim JH:** Increased cures using fractionated exposure of X-irradiation and hyperthermia in the local treatment of the Ridgeway osteogenic sarocoma in mice. Radiology 113:199 -202, 1974
16. **Hornback NB, Shupe R, Shidnir H:** Radiation and microwave therapy in the treatment of advanced. cancer. Radiology 130:459-464, 1979
17. **Robinson JE, Wizenberg MJ:** Thermal sensitivity and the effect of elevated temeprature on the radiation sensitivity of Chinese hamster cells. Acta Radiol 13:241-248, 1974
18. **Westra A, Dewey WC:** Variation in sensitivity to heat shock during the cell-cycle of Chinese hamster cells in vitro. Int J Radiat Biol 19:467-477, 1971
19. **Kim SH, Kim JH, Hanh EW:** The enhanced killing of irradiated Hela cells in synchronous culture by hyperthermia. Radiat Res 66:337-345, 1976
20. **Powers WE, Tolmach LJ:** Demonstration of an anoxic component in a mouse tumor-cell population by in vivo assay of survival following irradiation. Radiology 83:328-335, 1964
21. **Gerweck LE, Gillette EL, Dewey WC:** Killing of Chinese hamster cells in vitro by heating under hypoxic or aerobic condition. Eur J Cancer 10:691 -693, 1974
22. **Gerweck LE:** Modification of cell lethality at elevated temperatures; pH effect. Radiat Res 70:224 -235, 1977
23. **Hahn GM:** Metabolic aspects of the role of hyperthermia in mammalian cells inactivation and their relevance to cancer treatment. Cancer Res 34:3117 -3123, 1974
24. **Song CW, Rhee JG, Levitt S:** Implication of blood flow in combined treatment of tumors by radiation and hyperthemria. The 6th Int cong of radiat Res May 13-19, 1979, p 166. (Astract)
25. **Busch W:** Über den einfluss Welchen heftigere Erysipden zuweilen auf organisierete Neubildungen ausäben. In Hornback NB: Radiation and Microwave Therapy in the treatment of advanced cancer, Radiology 130:459-464, 1979
26. **Coley WB:** The treatment of malignant tumors by repeated inoculation of erysipelas, with a report of 10 original cases. Am J Med Sci 105:483-511, 1893
27. **de Keating-Hart:** La fulgaration et ses rescelto dans le traitement du cancer, dares cure statistique personnelle de 247 cas In Guy AW, Chou CK: Physical aspects of localized heating by radiowaves and microwaves "In hyperthermia in cancer therapy, GK Hall Medical Publishers, Boston, 1986, p 279
28. **Gassler AE, McCarty KS, Parkinson MC:** Eradication of spontaneous mouse tumors by high frequency radiation. Exp Med Surg 8:143, 1950
29. **Allen FM:** Biological modification of effect of roentgen rays II. High temperature and related factors. Am J Roentg 73:836-848, 1955

= 국문초록 =

마이크로파 나선형 안테나의 제작과 온열분포

이화여자대학교 의과대학 방사선과학교실

이 경 자

마이크로파온열요법은 피부 및 국소종양에 대한 방사선과 병행요법으로서 치료성과를 얻고 있다.

저자들은 가정용 전기오븐을 이용하여 온도측정 및 조절장치를 할 수 있는 마이크로파온열기를 개발하여 적용가능한 환자를 치료하여 왔다. 그러나 선형단극 안테나로 제작된 applicator는 가열 깊이가 2~4 cm로 낮고 온도분포가 불균일하여 많은 어려움이 있었다.

저자들은 안테나의 길이를 마이크로파의 파장과 같거나 배수로 하여 효율을 높게 하고 모양을 나선형으로 한 applicator를 여러개 제작하여 온열분포를 측정하였다. 안테나 길이가 파장과 같은 12.2 cm이고 직경 4 cm의 나선형모양을 가진 applicator의 온열분포가 대칭적이고 넓으며 (FWHM=3.5 cm) 보다 깊이 가열할 수 있어 (D_{eff}=4 cm) 온열치료에 많은 도움을 줄 수 있다고 사료된다.