Flexible electronics based on polysilicon thin film transistor

G. Fortunato, M. Cuscunà, L. Maiolo, F. Maita, L. Mariucci, A. Minotti, A. Pecora, D. Simeone, A. Valletta, A. Bearzotti, A.Macagnano, S. Pantalei and E. Zampetti
IMM-CNR, Via del Fosso del Cavaliere 100, 00133 - Rome (ITALY),
tel. + 39 0649934594; e-mail: guglielmo.fortunato@cnr.it

Keywords : polysilicon TFTs, flexible electronics, sensors

Abstract

In this work we present a process to fabricate low-temperature polysilicon (LTPS) TFTs on polyimide (PI) layers, spin-coated on Si-wafer used as rigid carrier. This process has been then used to fabricate elementary circuits as well as circuits for sensor applications.

1. Introduction

Fabrication of electronic circuits on flexible substrates is attracting an increasing interest for many applications, such as displays, system on panel, distributed ambient intelligence and biomedical sensors. Flexible electronics offers many advantages in addition of being conformable or even rollable, including lower production cost, lightness and robustness [1]. Among the different thin film transistor (TFT) technologies, low-temperature polycrystalline silicon (LTPS) offers best device performance as well as the possibility to provide CMOS circuits. Different groups have already shown that it is possible to directly fabricate LTPS TFTs on polymer substrates, such as polyarylite (PAR) [1] or PES [2]. The LTPS TFTs fabrication process, in fact, is becoming totally compatible with new polymeric materials that have higher glass transition temperatures, low surface roughness and low Coefficient of Thermal Expansion (CTE) as PAR and polyimide (PI) films [1]. However some problems are still present in the fabrication process, such as difficulties of polymer substrate handling, the need to protect polymer from external chemical agents and thermal stress that can induce polymer substrate shrinkage. In order to eliminate polymer shrinkage during the fabrication process and overcome the problem of substrate handling, we recently introduced a new fabrication method on PI. In particular, the PI layer was spin coated over a carrier (Si-wafer, glass) and was mechanically separated from the carrier after completing the device fabrication [3].

In this work we show that this process can be successfully applied to the fabrication of elementary circuits as well as of sensorial systems. Sensorial systems, based on either capacitive or resistive type sensors, were fabricated by integrating read-out electronic circuits based on polysilicon TFTs on thin flexible substrate. In particular, we fabricated a humidity sensor and a volatile organic compounds (VOCs) sensor, based on interdigitaded electrodes (IDE) covered by chemically interactive materials.

2. LTPS TFT technology on flexible substrates

In order to fabricate LTPS TFTs on polymeric substrates, two major issues have to be solved: the active layer crystallization and the low-temperature deposition of high quality gate oxide.

Excimer laser crystallization has been proposed with some success [1-3] for the fabrication of polysilicon TFTs on polymeric substrates. A critical issue to successfully perform excimer laser crystallization is represented by the hydrogen present in the amorphous Si precursor, normally deposited by plasma enhanced chemical vapour deposition (PECVD) and containing a large amount of H (around 10 at. %). In fact, when subjected to the laser irradiation, the a-Si:H can undergo severe morphologic and structural modifications, due to the nucleation and growth of volume defects, formed by the agglomeration of H_2 and the subsequent out-diffusion, leaving cavities in the Si layer. In the LTPS TFT technology on glass substrates, to prevent these problems thermal treatments are performed in the temperature range 450-550°C. Since such thermal treatments cannot be performed when using plastic substrates, we developed a process which combines low-temperature annealing (300°C) with laser dehydrogenation/crystallization. Good quality LTPS

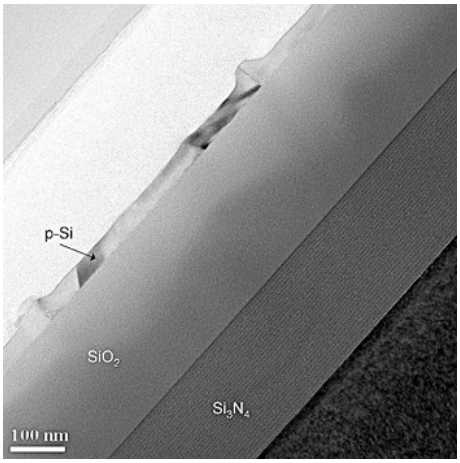

Fig. 1. Cross sectional TEM image of the deposited layers after excimer laser annealing.

directly on PI substrates was obtained, as shown in Fig. 1, with a reduced shot density, if compared with previous works [1-2].

The other relevant technological step is related to the possibility to obtain high quality gate dielectric at low temperature. Previous works [4] have shown that SiO_2 is fundamentally poorer, when deposited at low temperature, both electrically and with respect to defects, such as pinholes, causing major issue for yield. We have recently shown [3] that it is possible to obtain high quality SiO_2 films deposited at RT by ECR PECVD using a gas mixture of O_2:He:SiH_4 reactant gas and at a pressure of 3 mTorr. Deposited SiO_2 films resulted very compact with a very low content of hydrogen and hydrogen-containing species. From the electrical characterization we determined that trapping into the gate oxide was occurring for electric fields exceeding 7 MV/cm, breakdown field >10 MV/cm and interface state density $<10^{11}$ states/cm^2 eV.

N-channel LTPS TFTs were fabricated adopting the non self-aligned architecture. First, PI is spin-coated onto 3'' thermally oxidized Si-wafer and cured at a maximum temperature of 350°C. The cured PI is 8 μm thick and before starting deposition of active layers, we grow on PI a barrier layer consisting of a stack of silicon nitride and silicon dioxide layers. Main processing steps included active layer de-hydrogenation-crystallization process, performed using an excimer laser, source-drain contact formation by deposition of heavily doped n-type a-Si followed by laser activation, gate oxide deposition by ECR-PECVD. After completing device fabrication, the PI layer was mechanically released from the rigid carrier, which can be re-used for a new fabrication process.

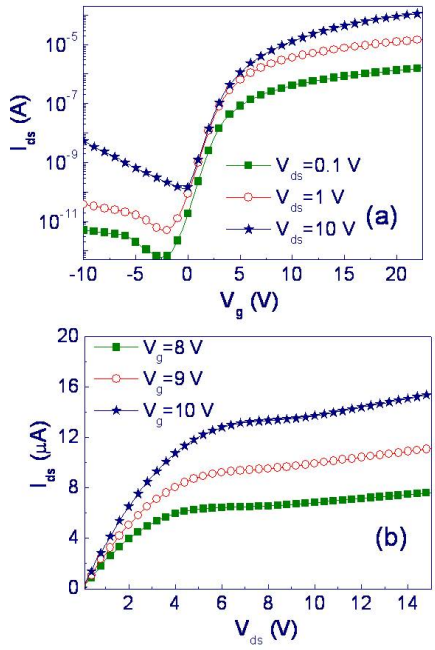

Fig. 2. (a) Transfer electrical characteristics for a device with L = 10 μm, W = 10 μm measured at different V_{ds}. (b) Output electrical characteristics measured at increasing V_g.

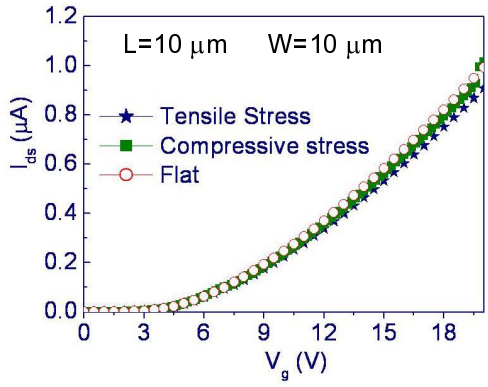

Fig. 3. Transfer characteristics for TFTs under different mechanical stress with a bending radius R=1.3 cm.

It could be noted that, due to the low mechanical stress of the deposited films, no bending problems of the freestanding PI film were observed.

In Fig. 2 the transfer and the output characteristics of LTPS TFTs on PI are shown and the main parameters are: leakage current below 10 pA, I_{on}/I_{off} $>10^6$, threshold voltage V_t=7 V, field effect mobility 50 cm^2/Vs and subthreshold slope 0.9 V/dec. The device electrical characteristics were also measured under compressive and tensile strains at four different bending conditions (7.5, 5, 3 and 1.3 cm bending radius). The strain direction was parallel to the TFT

source-drain current path. No relevant effects on transfer characteristics were observed in both strain condition cases (see Fig.3).

3. Circuit applications

By using the LTPS technology above described, several elementary circuits have been fabricated on PI, including logic gates, ring oscillators, amplifiers.

As an application of such technology, we designed and fabricated read-out electronics, based on LTPS TFTs, for sensorial system, based on either capacitive or resistive sensors.

We developed an integrated humidity sensor, based on a capacitive sensor where a thin layer of Bisbenzocyclobutene (BCB) is used as dielectric sensitive material. BCB was deposited on the bottom electrode by spin-coating, reaching a thickness of about 800 nm and then dried in furnace at a temperature of 250°C for 1 h. The upper electrode is a sequence of square-pattern structure, in order to allow the interaction between BCB and the analyte. The readout interface chosen for the capacitive sensor is a ring oscillator circuit, integrated on the same PI substrate close to the sensor. If the capacitive sensor is connected to the last inverter and properly grounded, the capacitance variation of the sensor can be converted in a frequency shift. In our case, we choose a three stage ring oscillator (see Fig. 4): the low number of inverter stages allows to maximize the contribution of the capacitive sensor respect to the whole delay of the ring (since C_{SENS} is comparable to NxC_{GATE}) and, at the same time, gives the possibility to reduce the power consumption of the interface and to increase circuit speed. After completing device fabrication, the humidity sensor system is mechanically released from the rigid carrier and ready for measurements (see Fig.5). All the capacitance and frequency measurements were carried out at 25±0.5 °C in a suitable chamber made with a water repellent and chemical resistant material. A temperature and humidity sensor (by Honeywell) was used to monitor RH and temperature stability in the testing cell. measurements In fig.8 is depicted the dynamic frequency shift, $\Delta f=f-f_0$ where f_0 is the fundamental resonating frequency due to RH% variations. The integrated humidity sensor exhibited a good sensitivity to humidity with a linear variation of the frequency shift of about 11 Hz/RH%.

As an example of resistive sensor, we designed and fabricated a sensorial system based on interdigitated electrodes (IDE) covered by chemical interactive

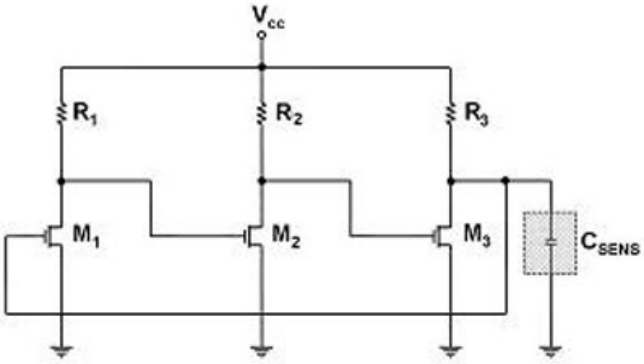

Fig. 4. Schematic of three stages ring oscillator i ntegrated with the capacitive sensor.

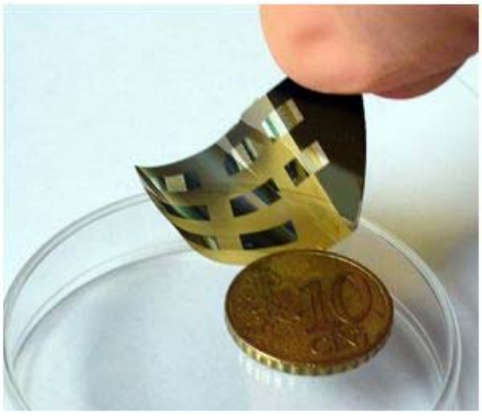

Fig. 5. Humidity sensors fabricated on polyimide after the release from the Si wafer.

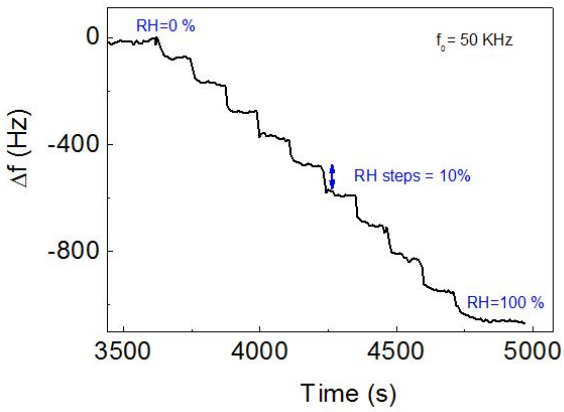

Fig. 6. Frequency shift of the sensor for increasing humidity concentrations diluted in nitrogen.

material (CIM) and integrated with read-out electronic circuits on thin flexible substrate. In particular, a volatile organic compounds (VOCs), e.g. methanol, lactic acid, etc., sensor has been implemented by mixing polyvinilpyrrolydone (PVP) carrier polymer

with polyaniline (PANi) nanofibers, produced by electrospinning technique [5]. The proposed sensorial system is composed by a pair of of IDE covered by a CIM and integrated with read-out electronic circuits as shown in Fig.7. The sensor converts the chemo-physical reactions, occurring between analyte and sensing material, into conductance variation, while the read-out electronic converts this variation into an output voltage (V_{si}) change. Read-out interface was designed in order to reduce the effect of operating temperature and power supply fluctuations and to enhance signal to noise ratio. The compensation of the polymer resistance fluctuation caused by temperature variation is obtained using a pair of IDE covered by the same CIM: one exposed to analytes (R_{Si}) and a second one covered by a thick protective layer (R_{REFi}), see Fig.7. In such manner, resistivity of the two sensors is influenced by temperature variation in the same way. Conversely, the voltage fluctuations have been compensated arranging the IDE sensors in a bridge configuration, where a metal resistor divider was another arm. To obtain a single output voltage correlated to the R_{Si} variations a simple differential stage has been implemented on flexible substrate. In Fig. 8 and 9 the dynamic relative voltage variation of PANi/PEO sensor in presence of methanol (MeOH) and lactic acid are reported. The measurements show a good response times and apparent low signal/noise ratio of the integrated sensor system.

4. Summary

We demonstrated that LTPS TFTs fabricated on PI substrates can be successfully used for circuit applications and, as an example, we designed and fabricated the read-out interface for a sensor system. The present technology can be effectively applied for other flexible electronics applications, including displays and system-on-plastic.

5. References

1. G N. D. Young et al., *Proc. Materials Research Soc. Symp.*, **769,** H2.1 (2003)
2. D.Y. Kim et al., J. Korean Phys. Soc., **48**, pp. 61-63 (2006).
3. A. Pecora et al., Solid State Electr., **52**, pp. 348-352 (2008).
4. J. Batey et al., J. Appl. Phys., **60**, pp. 3136 (1986).
5. S. Ramakrishna et al., An Introduction to Electrospinning and Nanofibers, World Scientific Publ. Co. Pte. Ltd. (2005).

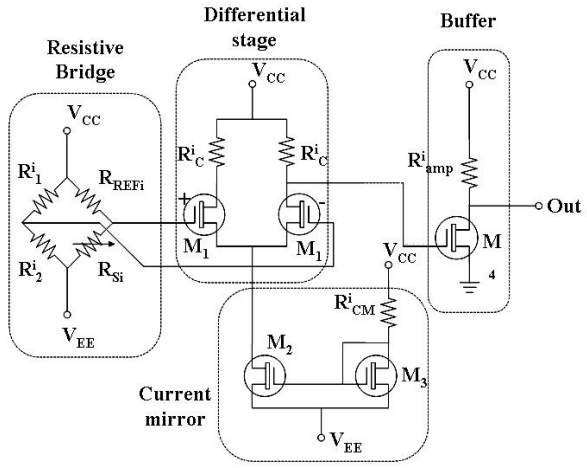

Fig. 7. Schematic of the read-out electronic for the resistive sensor.

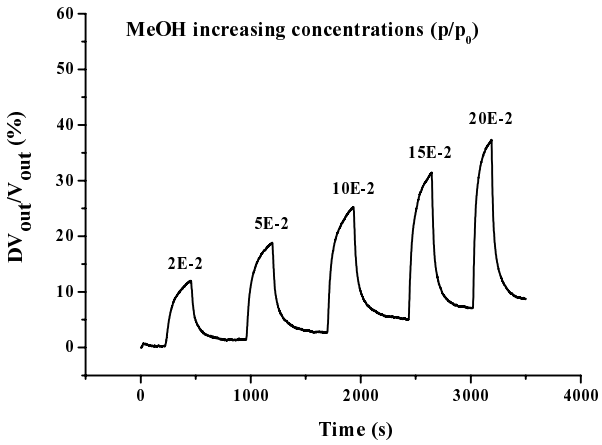

Fig. 8. Dynamic response, in term of relative voltage variation, of the PANI/PEO fibers, at different methanol concentrations.

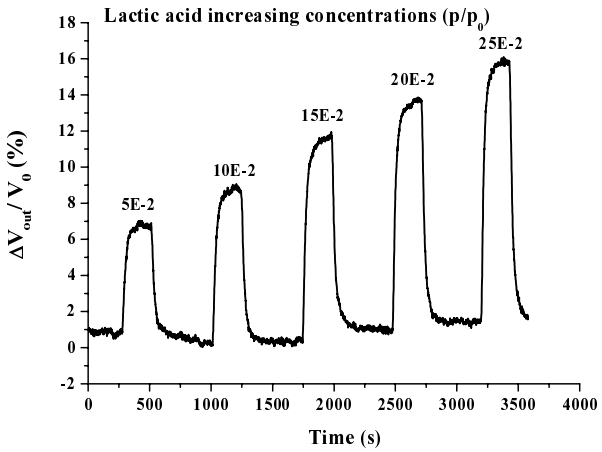

Fig. 9. Dynamic response, in term of relative voltage variation, of the PANI/PEO fibers at different Lactic acid concentrations.