대화형 디지털 TV 방송

2000. 5. 25.

안 치 득

Radio & Broadcasting Technology Laboratory

ETRI Electronics and Telecommunications Research Institute

Contents

- Introduction
- Current Issues

3. Approaches
4. Implementation
5. Conclusion

Radio & Broadcasting Technology Laboratory

ETRI Electronics and Telecommunications Research Institute

멀티미디어 기술발전 전망 - I

정보사회의 특성

☞ 경제가치기준 : 정보
☞ 정보유통의 활성화 : 1, 2차 산업의 정보집약성 증대 및 3차산업의 다양화
☞ 정보이용의 대중화 : 정보제공자 = 정보이용자 (prosumer)

문화/문명 발전의 바탕

☞ 멀티미디어 기술에 의한 가상공간(Cyber/Virtual - Networked Space/World)에서의 정보유통 --> 가상미디어

Radio & Broadcasting Technology Laboratory

ETRI Electronics and Telecommunications Research Institute

멀티미디어 기술발전 전망 - II

☞ 표현미디어의 대중화 및 자유화

- *You can represent **whatever** you may imagine.*

☞ 방향

- 융통성(flexibility)의 증대 : 통신방송 이종망간 연동, internet
- 대화성(interactivity)의 증대 : user-friendly, intelligent
- 이동성(mobility)의 증대 : 소형화, 경량화
- 현실감(reality)의 증대 : quality, 3D

☞ 가상미디어에 의한 서비스 제공

- 시공간 한계극복 --> 세계화?

Radio & Broadcasting Technology Laboratory

ETRI Electronics and Telecommunications Research Institute

멀티미디어 서비스 발전 전망

☞ 단순시청형 --> 정보선택형 --> 정보요구형 --> 정보 창조형

(국부 대화형) (양방향 대화형)

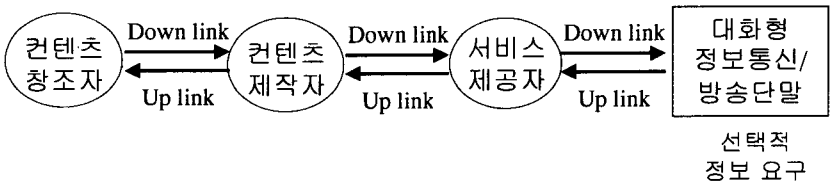

Digital TV broadcasting

- 1st generation : digital transmission of conventional and/or high quality AV program is on-air in most countries
- 2nd generation : + advanced EPG and data including web will be introduced within 1 or 2 years
- 3rd generation : + interactive contents program will be introduced in couple of years

Digital TV Broadcasting in Korea

- ❑ DSTB(Digital Satellite TV Broadcasting) under the tentative license already from 1996
- ❑ DTTB(Digital Terrestrial TV Broadcasting) field trials by KBS, MBC, SBS, and EBS from 1999 in Seoul area
- ❑Multimedia data broadcasting trials in 2001 followed by the 2nd gen. in 2002
- ❑ For DCTB(Digital Cable TV Broadcasting) domestic standardizations just start.
- ❑ 3DTV demonstration during the 2002 Worldcup

Radio & Broadcasting Technology Laboratory

ETRI Electronics and Telecommunications Research Institute

향후전망 : 융합된 방송/통신 서비스 제공

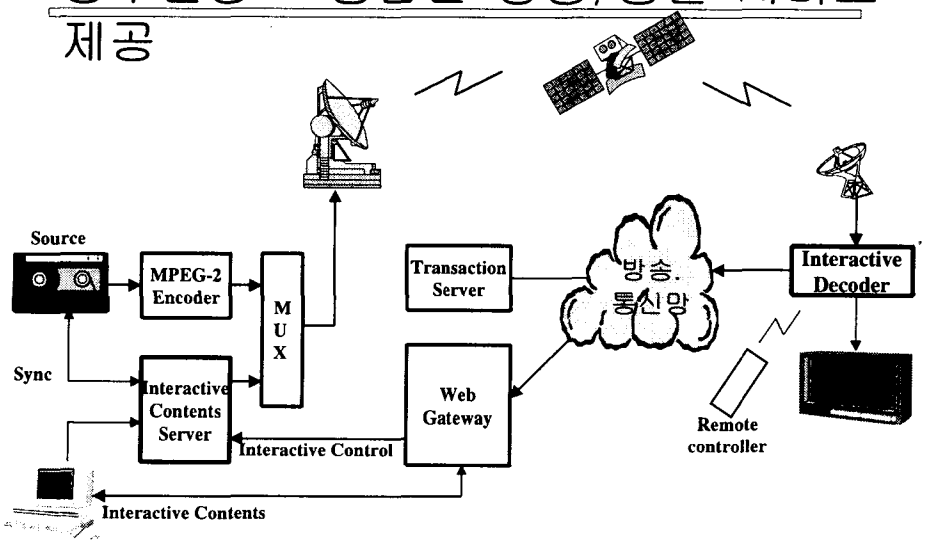

Radio & Broadcasting Technology Laboratory

ETRI Electronics and Telecommunications Research Institute

대화형방송 서비스 제공 정보

- EPG
  - 매체별, 시간별, 또는 주제별로 프로그램에 관련된 정보
  - STB : 지능형 Agent 기능과 사용자 취향에 따른 프로그램의 자동 선택 및 저장
- 프로그램의 내용과 관련된 정보
  - 드라마 : 줄거리, 등장인물, 배경음악, 촬영장소
  - 스포츠 : 과거 경기 전적, 선수의 프로필 및 성적
  - 상품정보 제공 및 주문
- 현재 방송되는 프로그램의 내용과 무관한 정보
  - 날씨, 교통정보, 증권정보 등을 포함한 일반적인 사회 경제 정보

Radio & Broadcasting Technology Laboratory

ETRI Electronics and Telecommunications Research Institute

대화형 방송 서비스

- 양방향 대화형 방송 서비스
  - Internet 서비스 (사용자의 Return Channel 이용)
  - VOD, NOD
  - Interactive Home shopping
  - 게임, 음악, 소프트웨어 download
  - 대화형 교육 방송
  - 시청자 참여 퀴즈 프로그램
  - 실시간 여론 조사
  - 기타

Radio & Broadcasting Technology Laboratory

ETRI Electronics and Telecommunications Research Institute

방송 환경에서의 전자상거래 특징

- 친숙성
- 사용의 용이성
- 긴 시청 시간
- 오락과 정보의 동시 제공
- 부가서비스 도입 용이 --> 방송 채널 임대
- 기타

Radio & Broadcasting Technology Laboratory

ETRI Electronics and Telecommunications Research Institute

Major Interactive Service Activities

- WebTV, OpenTV : in business in USA, EU, etc.
- MS & AT&T : trial in USA
- AOL & DirecTV : trial in USA
- FloraTV : service research trial in USA
- NexTV(New media consumption on extended interactive broadcasting environment) : service research trial in EU

Radio & Broadcasting Technology Laboratory

ETRI Electronics and Telecommunications Research Institute

Issues in interactive TV broadcasting

- ❑ No broadly agreeable specifications and trials
  - ATSC, DVB, ITU
  - ATVEF, TVAnytime, etc.
  - NexTV, FloraTV, etc.
  - MPEG-21, AICi, FIPA, OPIMA, DOI, INDECS, etc.
- ❑ Need provisions for the whole broadcasting chain including contents creation, providing, delivery, and client
- ❑ Need contents IPMP(Intellectual Property Management and Protection) and CAS(Conditional Access System)
- ❑ Need harmonization between broadcasting media as well as communication networks

- ❑ PC on TV v.s. TV on PC : Others vs WinTel

International Standard Activities

- Transport and service protocol (draft standard)
  - ATSC T3/S13, S16
  - DVB (ETSI)
- Client API (draft standard)
  - ATSC-DASE (T3/S17), ATVEF
  - DVB-MHP
- Service Specification (in progress)
  - FloraTV : based on ATSC standard in USA
  - NexTV : based on DVB standard in Europe
- Interactive Contents Specification : AICi

Interactive service system model

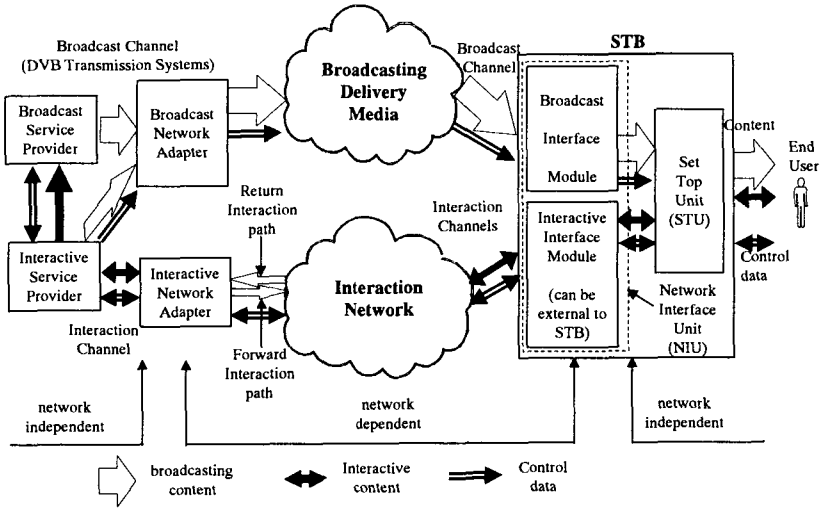

Radio & Broadcasting Technology Laboratory

ETRI Electronics and Telecommunications Research Institute

Interactive system model

o Broadcast channel

- one-way from the broadcast provider to the user
- carry content and/or control data required by the interactive application and/or communication protocol to the user(receiver)
- may include the forward interaction path for interactive services

o Interactive channel

- bi-directional between the receiver and the interactive service provider
- carry both content and control data required by the interactive application or communication protocol
- forward interaction path for data from the broadcast provider to the user, i.e., downstream
- return interaction path for data from the user to the broadcast provider, i.e., upstream

Radio & Broadcasting Technology Laboratory

ETRI Electronics and Telecommunications Research Institute

Protocols for Interactive Service

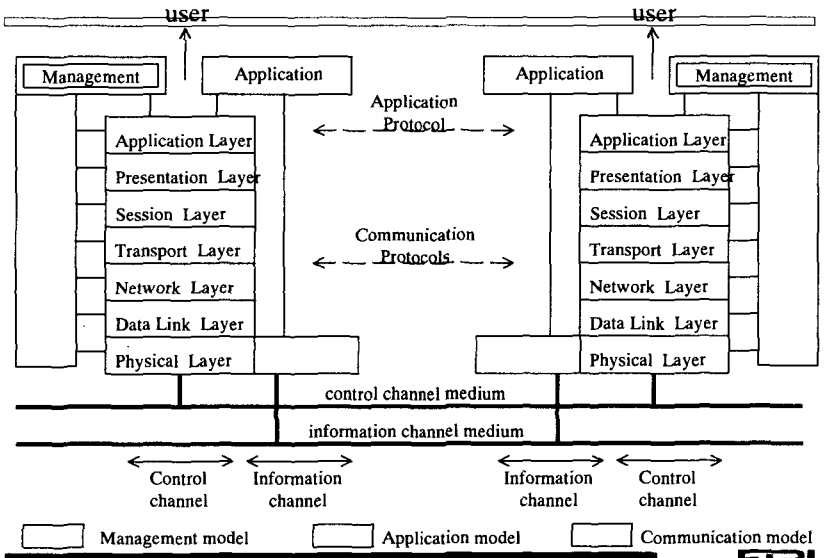

Radio & Broadcasting Technology Laboratory

ETRI Electronics and Telecommunications Research Institute

ATSC Standards

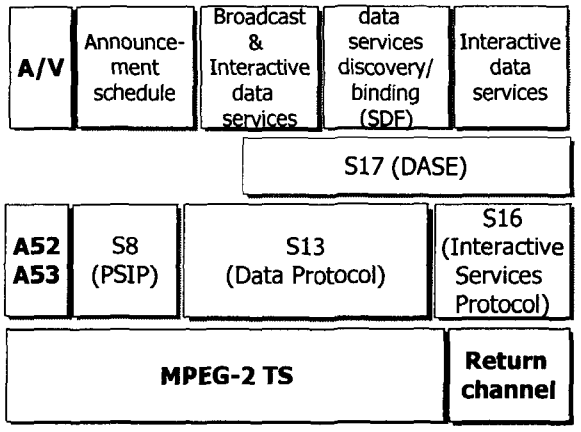

Radio & Broadcasting Technology Laboratory

ETRI Electronics and Telecommunications Research Institute

ATSC Data Broadcasting protocols

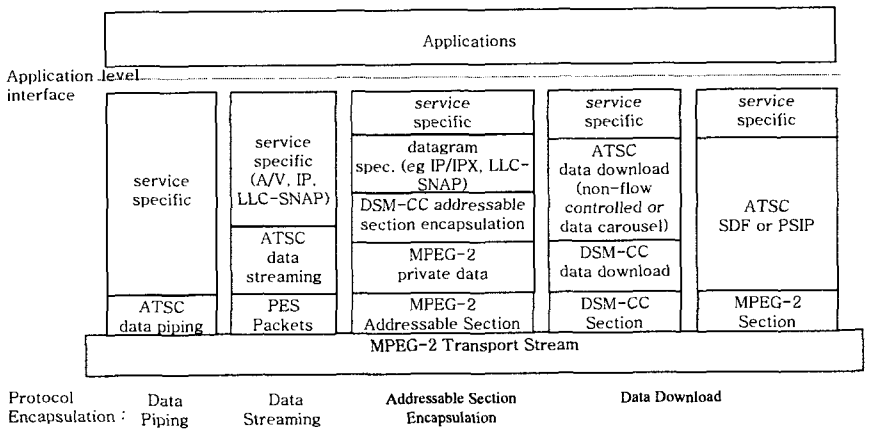

: ATSC : MPEG-2 DSM-CC

LLC-SNAP : Logical Link Control – Sub Network Access Protocol
SDF : Service Description Framework

Radio & Broadcasting Technology Laboratory

ETRI Electronics and Telecommunications Research Institute

ATSC Data Broadcast Protocol Packetization, Synchronization, and Protection Layers

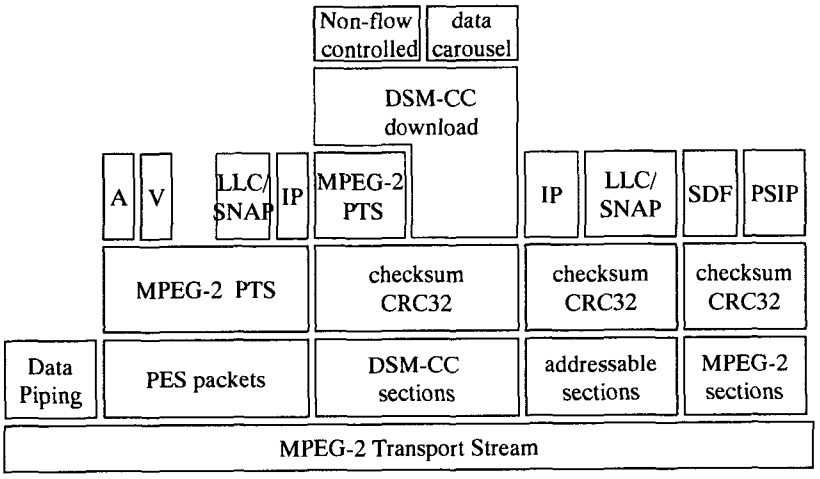

Radio & Broadcasting Technology Laboratory

ETRI Electronics and Telecommunications Research Institute

DVB reference model : API & middleware

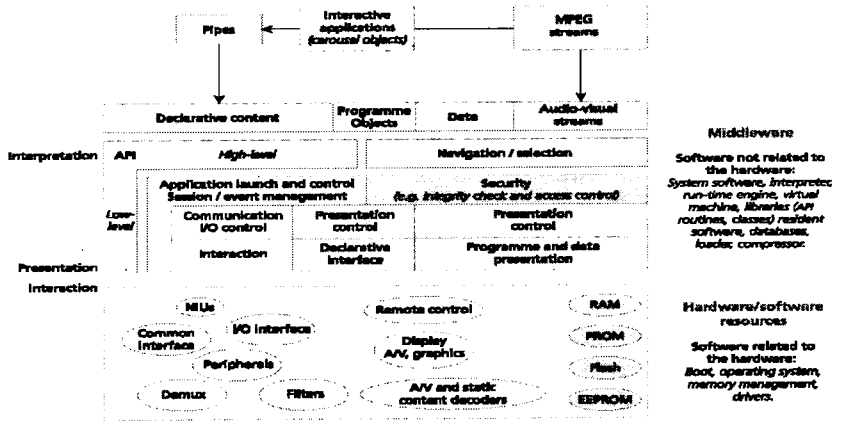

Radio & Broadcasting Technology Laboratory

ETRI Electronics and Telecommunications Research Institute

DVB Data Broadcasting protocols

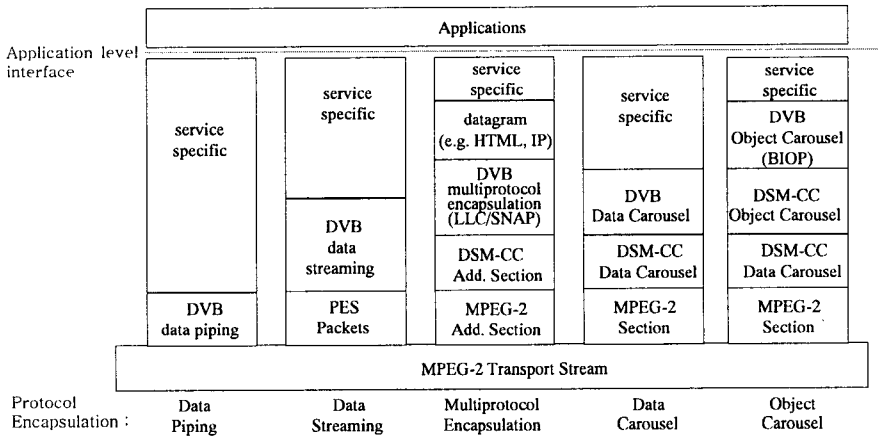

DVB	MPEG-2 DSM-CC	MPEG-2 Systems

LLC-SNAP : Logical Link Control – Sub Network Access Protocol
BIOP : Broadcast Inter ORB Protocol

Radio & Broadcasting Technology Laboratory

ETRI Electronics and Telecommunications Research Institute

Differences between DVB & ATSC : Data Broadcasting Spec.

Broadcast Service	DVB	ATSC
Proprietary	Data Piping	Data Piping
Asynchronous	PES DSM-CC Data Carousel	DSM-CC Add. section DSM-CC Data Carousel
Synchronous	PES	PES by SCTE DVS 132
Synchronized	PES	PES
Protocol Encapsulation	DSM-CC Datagram_section: LLC/SNAP Encapsulation IP Datagram	DSM-CC Add. Section : LLC/SNAP Encapsulation IP Datagram

* SCTE(Society of Cable TV Engineers)

Differences between DVB & ATSC : Data Broadcasting Spec.(cont.)

Protocol	Characteristic	DVB	ATSC
PES	Async. streaming	Allowed	Allowed
	sync. Encapsulated streams	Not specified	LLC/SNAP
Protocol Encapsulation	LLC/SNAP flag	1:LLC/SNAP 0:IP Datagram	1
Data Carousel	DSI	supported	Not supported
	DownloadCarousel	supported	supported
	DII	Single	Multiple
	DDB	Unbounded module not supported	Unbounded module supported
DSM-CC Download Protocol	Synchronized Data Carousel (optional)	Not supported	PTS ext. in DSMCC adaptation hdr in DDB

ATSC- DASE : architecture

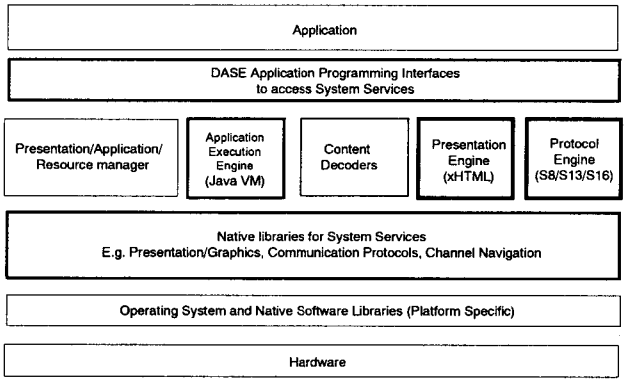

ATSC-DASE components

- Application Execution Engine
  - Interprets or executes application code in platform independent manner
  - Implemented directly on the receiver's OS and libraries
  - Acts as glue or integrator of DASE environment
  - Provides a plugin-type platform for content decoders and presentation engines
  - The selected application execution engine will be on all DASE-compliant receivers
- Presentation Engine
  - Understands commands for how the screen is to appear
  - Provides spatial control over elements on screen
  - Provides temporal control over media elements
  - May be replaced or upgraded by broadcaster or manufacturer
  - The selected presentation engine must be on all DASE-compliant receivers

ATSC-DASE components

- Content Decoder
  - Decodes or interprets mono-media content
- APIs for System Services
  - Allow access to system services provided by underlying operating system and hardware components on receiver
  - Must be used via the application execution engine
  - Abstraction layer above the operating system

ATSC-DASE : components

o Application execution engine(AEE)
- Java VM

o Presentation engine(PE)
- xHTML with Cascading Style Sheets
- ECMAScript for inline dynamic control of the declarative content (optional).
- Document Object Model interfaces for control of the declarative content through ECMAScript or the application execution engine

o Content decoders
- Java Media Player API for MPEG-1, 2, QuickTime, AVI, WAV, AU, MIDI, and MPEG-4/VRML

o System services
- JavaTV API to access system services, presentation service

DVB-Multimedia Home Platform

- Goal
  - setting a scene for an horizontal market
  - Local cluster + In home network
  - Resolving the generic/proprietary API issues
- Priority
  - One Standard API
    - that handles **Interactive Digital Television**
    - and can link to the **Internet**
- Applications
  - EPG
  - Software download
  - Data service
  - Internet Navigation

DVB Data Broadcasting Spec.

- Four profiles corresponds to an application area
  - Data Piping
    - simple, asynchronous, end-to-end delivery of data
  - Data Streaming
    - a streaming-oriented, end-to-end delivery of data in either an asynchronous, synchronous or synchronized way
  - Multi-protocol Encapsulation
    - datagrams of communication protocols
  - Data Carousels
    - the periodic transmission of data modules

DVB-MHP reference model

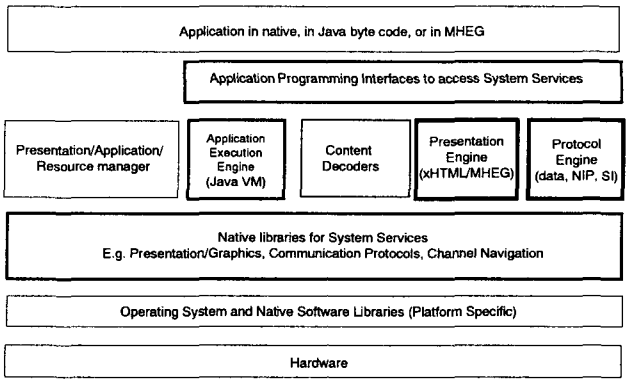

Radio & Broadcasting Technology Laboratory

ETRI Electronics and Telecommunications Research Institute

Differences between DVB & ATSC

:

Interactive Application Specification

Broadcast Service	DVB	ATSC
Application code	Native/MHEG/Java	Java
API	MHEG interpreter & Java TV API	Java TV API
PE	MHEG/xHTML	xHTML & Java
AEE	Java VM	Java VM

Radio & Broadcasting Technology Laboratory

ETRI Electronics and Telecommunications Research Institute

Differences of Interactive DTV Standards

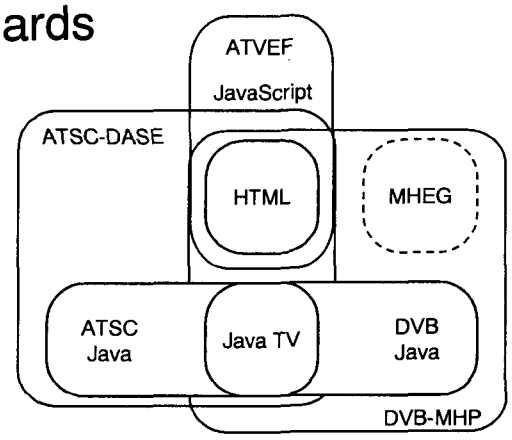

JavaTV

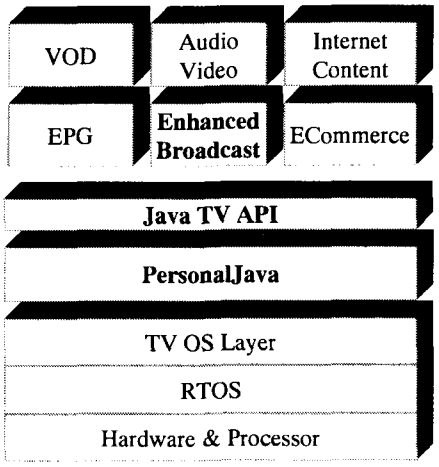

- Network Independent Application Environment for Broadcast Networks and Television Receivers
- An optional extension to PersonalJava™ providing standardized access to set-top box capabilities
- Provides JavaTV API

DAVIC Applications

: 디지털 전송 환경에서 전통적인 TV 서비스 기능 향상

1. TV anytime

o User initiated services
- EPG, Internet connection, Embedded reference, Immediate recording

o Agent initiated services
- pre-defined user profile
- PSIP(Program & System Information Protocol) 및 확장된 정보 이용

o Video file transfer

DAVIC Applications(cont.)

o Content usage
- Web link, segment jumping, content customization

2. TV anywhere : Digital TV on Internet or mobile networks

NexTV in Europe

o From 1999. 5.
o Purpose
- trials of interactive, on-line and e-commerce services over digital broadcasting media and the internet

o Standards
- DVB, AICi(MPEG-4, Web3D, XML, Java, etc.)

o Receiver interoperability thru
- terrestrial/cable/satellite TV

NexTV Applications

: Digital TV 광고 기능 향상을 고려한 정보서비스 위주

o advanced EPG, program enhancement
o buy-me button with ad

o data ticker
o interactive home shopping

o interactive commercial
o interactive entertainment
o demographic programming, etc.

AICi Purpose

o to integrate interactive content (creation) specifications for user devices to offer a range of basic through advanced interactive applications using 3D as well as 2D content, in stored and streamed form : missed in current ATSC and DVB standards

-->to integrate MPEG-4/X3D/JAVA, and xHTML in order to provide interactive broadcasting services over MPEG-2 TS, IP and DSM

AICi Principles

- Delivery in various transport environments
  - including MPEG-2 and IP environments
  - and combinations of broadcast/interactive delivery
- Presentation engine : XML
  - **integration** of MPEG-4, xHTML (XML-ized HTML 4.0), X3D (XML-ized VRML) content
  - focus on high level session description and — MPEG-4 BIFS commands and animation

AICi Architecture

o based on ATSC-DASE & MPEG-4 over MPEG-2 TS, IP and file format for DSM

o delivery & streaming framework

o presentation engine(parsing & decoding, object model integration, composition & rendering, ...)

o application execution engine(session management, ...) by JAVA VM and API

Streaming for interactive services: environment

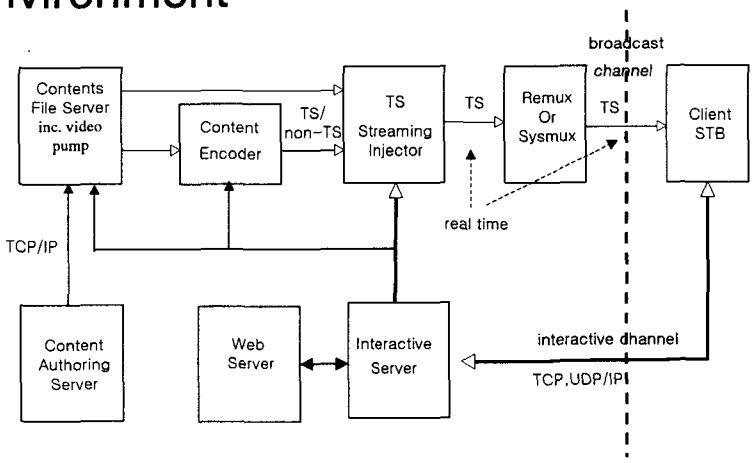

Streaming for interactive contents services: reference model

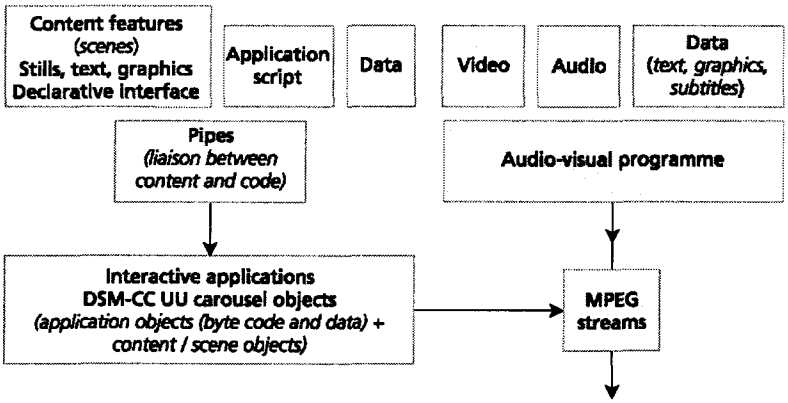

Radio & Broadcasting Technology Laboratory

ETRI Electronics and Telecommunications Research Institute

Implementation example

Services	인코딩	전송규격	프로토콜	비고
EPG	ATSC-PSIP	MPEG-2 Systems	Private Section	
Web	TCP/IP	ATSC t3/s13 data broadcasting	DSM-CC Data Carousel	
부가정보	XML	ATSC t3/s13 data broadcasting	DSM-CC Data Carousel	다양한 방법 존재
Interactive contents (PIP video, audio clip, graphics, BIFS/OD, MPEG-7)	MPEG-4 systems	MPEG-4 over MPEG-2 TS (ISO/IEC 13818-1: Amd.7)	PES Private Section	
		ATSC Data broadcasting (file)	Private Section	
Scene description	PSIP + XHTML (BIFS)	MPEG-2 Systems	Private Section + DSM-CC Data Carousel	HTML 수용
local storage	MPEG-7 +		TV anytime	

Radio & Broadcasting Technology Laboratory

ETRI Electronics and Telecommunications Research Institute

Streaming for interactive contents service : architecture

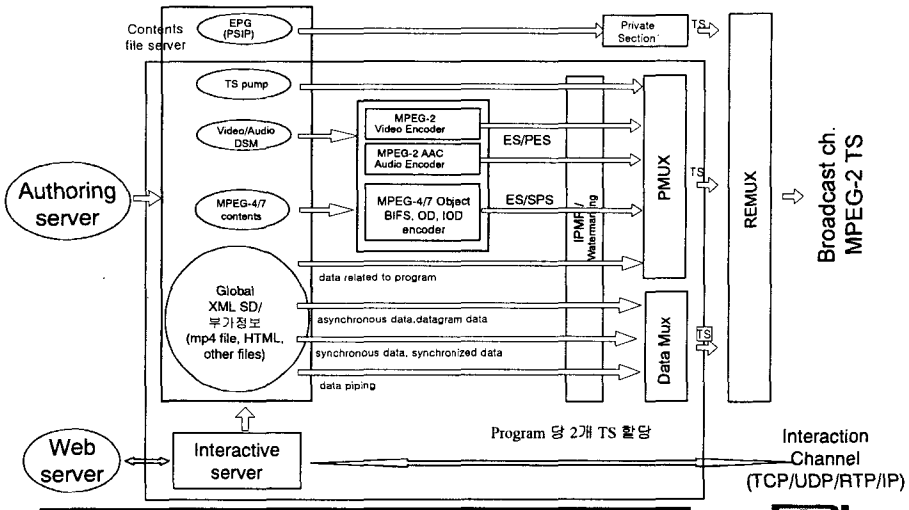

Radio & Broadcasting Technology Laboratory

ETRI Electronics and Telecommunications Research Institute

프로그램 관련 MPEG-4 및 부가정보 Program MUX 구조도

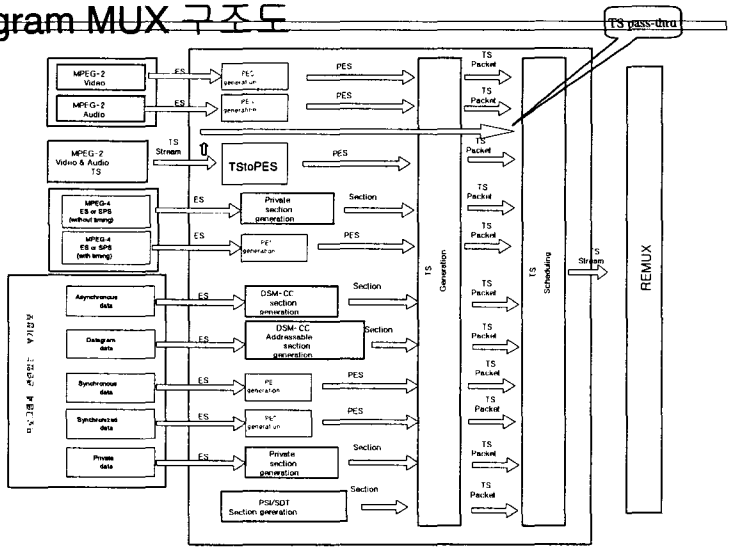

Radio & Broadcasting Technology Laboratory

ETRI Electronics and Telecommunications Research Institute

프로그램과 관련 없는 Data MUX 구조도

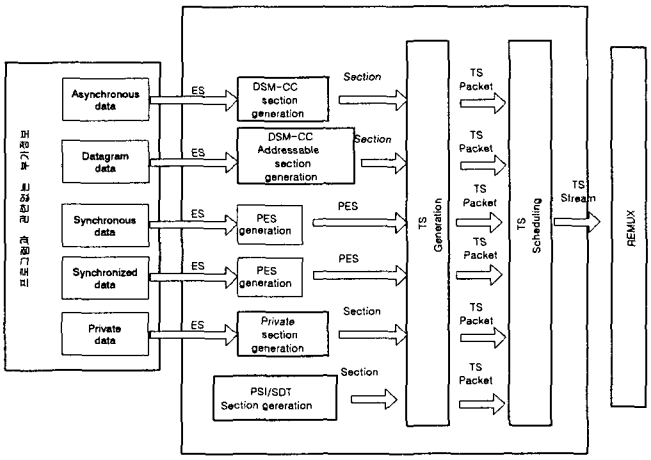

Radio & Broadcasting Technology Laboratory

ETRI Electronics and Telecommunications Research Institute

Interactive contents STB Structure

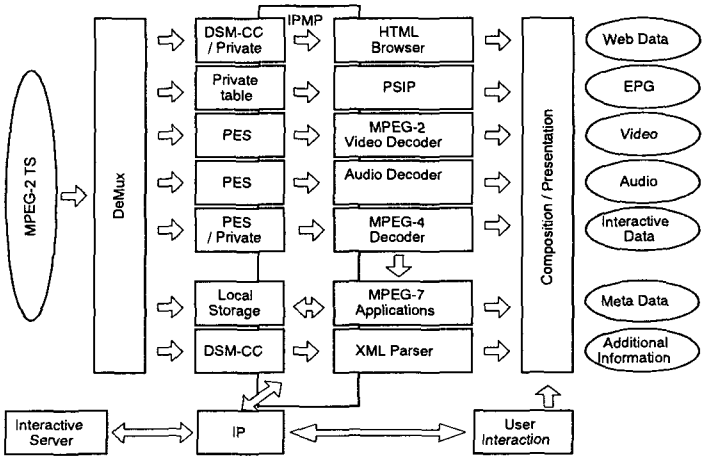

Radio & Broadcasting Technology Laboratory

ETRI Electronics and Telecommunications Research Institute

Interactive TV service demos

- ☞ 대화형TV 데모 1 : 일기예보
- ☞ 대화형TV 데모 2 : 녹화 프로그램 요약
- ☞ 대화형TV 데모 3 : 중계방송

Radio & Broadcasting Technology Laboratory

ETRI Electronics and Telecommunications Research Institute

Terminal system demonstration - I

MPEG-2 video displayed

Radio & Broadcasting Technology Laboratory

ETRI Electronics and Telecommunications Research Institute

Terminal system demonstration - II

Additional information menu displayed

Radio & Broadcasting Technology Laboratory

ETRI Electronics and Telecommunications Research Institute

Terminal system demonstration - III

Menu selected(1)

Radio & Broadcasting Technology Laboratory

ETRI Electronics and Telecommunications Research Institute

Terminal system demonstration - IV

Menu selected(2)

Radio & Broadcasting Technology Laboratory

ETRI Electronics and Telecommunications Research Institute

Terminal system demonstration - V

MPEG-4 menu displayed

Radio & Broadcasting Technology Laboratory

ETRI Electronics and Telecommunications Research Institute

Terminal system demonstration - VI

MPEG-4 objects selected

Issues to be solved

o Contents production
- multiple standards and tools : need to harmonize between DASE, DVB, AICi, etc.
- need to define contents exchange formats : mp4 file format

o Delivery systems
- streaming thru broadcasting, telecommunications, and Internet
- transcoding, splicing, switching(routing) in compressed domain
- contents IPMP, CAS related to E-Commerce : MPEG-21

o Client
- universal STBs

Methodology - I

o Need to specify gradual APPLICATIONS/SERVICES scenario first
- electronic commerce
- education : sw download etc.
- data services : EPG, data ticker, interactive ad., interactive entertainment, etc.

o Define functions to be provided from the client side first then the delivery chain and service provider

o Define business models and do field trials to verify

Methodology - II

o Need to harmonize between delivery media
- satellite : DVB-S MHP
- terrestrial : ATSC DASE
- cable : OpenCable

→ Java is the key in maximizing commonality between media

o Reduce the client side burden by providing the same service to the user

→ service profiling and format conversion in the service provider is needed

o Reduce regulation in contents production and client devices

Conclusion

- Need to specify what kind of interactive services be introduced in time: E-Commerce is the must
- Gradual development/deployment of services including required equipments
- Join international and domestic activities and develop domestic development platform

Further Information

- 차세대 방송 표준 포럼 :
  - http://www.nextb.or.kr
- MPEG 포럼
  - http://www.mpeg.or.kr
- MPEG
  - http://www.cselt.it/mpeg
- TVAnytime Forum
  - http://www.tv-anytime.org